Title 15
BUILDINGS AND CONSTRUCTION

Chapters:

15.04	Building Code
15.08	Standards for New Construction, Alterations and Repairs
15.12	Building Operations
15.16	Dangerous Buildings
15.20	Moving Buildings
15.24	Fire Limits
15.28	Fire Prevention Code
15.36	Swimming Pools
15.40	Property Maintenance Code
15.44	Fair Housing Regulations
15.101	Administration, Enforcement, Fees and Penalties

Chapter 15.04

BUILDING CODE[1]

Sections:

15.04.010	International Building Code 2009 – Regulations adopted and modified.
15.04.015	Amendments to the 2009 International Building Code.
15.04.020	2009 International Residential Code – One family and two family residences – Regulations adopted and modified.
15.04.030	International Mechanical Code 2009 – Regulations adopted and modified.
15.04.035	International Fuel Gas Code 2009 – Regulations adopted and modified.
15.04.040	National Electrical Code 2008 – Regulations adopted and modified.
15.04.045	Amendments to the 2008 National Electric Code NFPA 70
15.04.050	Plumbing code – adopted – modifications.
15.04.060	Building permit – Required.
15.04.090	Architectural committee – Created – Composition – Duty.
15.04.105	Flood damage prevention.
15.04.120	Time limit.

15.04.010 International Building Code 2009 – Regulations Adopted and Modified.

The provisions of Chapters 2 through 35, inclusive, of the 2009 International Building Code issued by the International Code Council, Inc., 4051 West Flossmoor Road, Country Club Hills, IL, 60478, not less than three (3) copies of which have been and are on file in the Office of the Clerk of the City of St. Charles, Illinois, for more than thirty (30) days, together with the amendments listed in Section 15.04.015 hereof, are hereby adopted as the regulations governing the construction of buildings and structures within the City of St. Charles, except for one- and two-family dwellings and townhouses not more than three stories in height, which are covered by Section 15.04.020. (For adoption of administrative provisions in Chapter 1 of the International Building Code, see Chapter 15.101).
(Ord. 2010-M-42 § 1; Ord. 2004-M-62 § 1.)

15.04.015 Amendments to the 2009 International Building Code.

1. Amend Section 202 "Definitions" (pg. 11) by adding the following:
   Townhouse: A single family dwelling unit constructed in a group of 3, 4, 5, or 6 attached units in which each unit extends from foundation to roof and with open space on at least two (2) sides. Dwelling units where more than six (6) units are attached shall be governed by code provisions applicable to multiple family dwellings, rather than the provisions of this one (1) and two (2) family dwelling code.
2. Amend Section 402.13 "Security Grills and Doors" (pg. 40) by adding Note #5 as follows:
   5. A security grill may not serve as the sole exit.
3. Delete the provisions of Section 402.10 "Smoke Control" (pg. 39) and substitute the following therefore:

402.10 Smoke Control: A ventilation system shall be provided that is capable of not less than six (6) air changes per hour for the volume of the tenant spaces and the hall. The ventilation system shall exhaust smoke from the point of development. Design shall be in accordance with Section 909.

4. Amend Section 403.3 "Automatic Sprinkler Systems" by deleting exceptions #1 & #2.
5. Amend Section 404.3 "Automatic Sprinkler Protection" (pg. 43) by deleting exceptions #1 & #2.
6. Amend Section 410.6 "Automatic Sprinkler System" by deleting exceptions #1, #2, & #3.
7. Amend the provisions of Section 506 by adding Section 506.6, as follows:
   506.6 Special Restrictions for Type V Construction: Notwithstanding any provisions of this code to the contrary, there shall be no increase of the allowable areas specified in Table 503 for any building of Type V-A or Type V-B Construction. Floor areas greater than those specified in Table 503 are only permitted for Type V construction when a four hour firewall is provided between sections of the building, and each section is within the limitations of Table 503. A minimum separation of 30 feet shall be provided between exterior walls of type V construction.
8. Delete the provision in section 706.3 "Materials" (pg. 90) in its entirety and substitute the following therefore:
   706.3 Materials: Firewalls shall be constructed of approved masonry materials or other similar approved product or assembly.
9. Delete the provisions in Section 903.2 "Automatic Sprinkler Systems – Where Required," inclusive of subsections 903.2.1 through 903.2.12 and Table 903.2.11.6 and substitute the following therefore:
   903.2 Where required. An approved automatic sprinkler system installed in accordance with the provisions of all applicable codes and standards shall be provided and maintained in full operating condition throughout every story and basement of all buildings subject to this code.

Exceptions:

1) Unoccupied structures of less than 400 square feet, considered low hazard and located not less than 100 feet from another structure. The requirements shall be subject to modifications by the authority having jurisdiction to compensate for particular building conditions to meet the intention of the code.
2) Salt Dome Structures, provided:
   a. The structure is constructed with approved noncombustible material.
   b. The structure is continually monitored by an approved automatic fire alarm system.
   c. The structure is located a minimum distance of one-hundred (100) feet from any principle building, fueling facilities, and other high hazard occupancies or materials as defined in the adopted Building Code.
3) Unenclosed Roof Structures:
   a. The structure is constructed with approved noncombustible material.
   b. The structure is located a minimum distance over one hundred (100) feet from any principle building.

10. Amend Sections 903.6 by adding 903.6.3 as follows:
    903.6.3 Change of use classification: An automatic sprinkler system shall be provided throughout a building, when the use classification of the building or a space within the building changes. This requirement shall be subject to modifications by the authority having jurisdiction to compensate for particular building conditions.
11. Delete the provisions of Section 907.2 "Where required" and substitute the following therefore:

907.2 Where Required: An approved fire alarm system installed in accordance with the provisions of this code and NFPA 72 shall be provided in new buildings and structures in accordance with Sections 907.2.1 through 907.2.23 and provide occupant notification in accordance with 907.6, unless other requirements are provided by another section of this code. Notwithstanding any provision of Section 907 and its subsections to the contrary, an approved manual fire alarm signaling system shall be installed and maintained in all buildings over one (1) story in height or over 1,000 square feet.

Delete all of the exceptions to 907.2.3 "Group E," in their entirety.

12. Delete the provisions of Section 907.6.5 "Monitoring" and its exceptions and substitute the following therefore:

    907.6.5 Supervisory service: Where required by this chapter or the International Fire Code, an approved supervising station in accordance with NFPA 72 shall monitor fire alarm systems. All required fire protective signaling systems shall transmit alarm and trouble signs to an approved central station, proprietary system, or remote-station system, and shall be approved by the Fire Department.

    The following methods are approved:

    1) Direct connect
    2) AES Radio or other approved 2-way radio frequency systems
    3) Or other methods approved by the Fire Official

    Exception: Supervisory service is not required for:

    1) Single- and multiple-station smoke alarms required by Section 907.2.10
    2) Smoke detectors in Group I-3 Occupancies
    3) Automatic sprinkler systems in 1 and 2 family dwellings

13. Delete the provisions of Section 907.6.5.1 "Automatic Telephone-Dialing Devices."
14. Amend the provisions of Section 912.1 "Installation" and substitute the following therefore:

    912.1 Installation. The type (Siamese, Storz) and size of the fire department connection shall be in accordance with the NFPA standard applicable to the system design and shall be subject to approval of the Fire Department, based upon an analysis of the building's size and use group. Generally, a 5-inch size, Storz type connection is required.

15. Add subparagraph 6 to Section 1006.3 "Illumination emergency power" as follows:

    6. In all rooms and spaces over 2,000 square feet in area with an occupancy load of 20 or more.

16. Amend the provisions of Section 1008.1.9.3 "Locks and Latches" by deleting Conditions No. 2, 2.1, 2.2, and 2.3.
17. Amend Table 1018.1 to read as follows:

Table 1018.1
Corridor Fire Resistance Rating

Occupancy	Occupant Load Served by Corridor	Required Fire-Resistance Rating (hours)	
		Without Sprinkler System	With Sprinkler System (c)
H-1, H-2, H-3	All	Not Permitted	1
H-4, H-5	Greater than 30	Not Permitted	1
A, B, E, F, M, S, U	Greater than 30	Not Permitted	1
R	Greater than 10	Not Permitted	1
I-2 (a), I-4	All	Not Permitted	1
I-1, I-3	All	Not Permitted	1 (b)
(a) For requirements for occupancies in Group I-2, see Section 407.3. (b) For a reduction in the fire-resistance rating of occupancies in Group I-3, see			

Section 408.7. (c) Buildings equipped throughout with an automatic sprinkler system in accordance with Section 903.3.1.1 or 903.3.1.2 where allowed.

18. Delete the provisions of Sections 1805.4.5 "Timber Footings" (pg. 366) and Section 1805.4.6 "Wood Foundations" (pg. 366) in their entirety.
19. Amend the provisions of Section 2308.8.2.1 "Engineered Wood Products" (pg. 473) by adding paragraph Section 2803.8.2.2 "I-Joist Frame" as follows:
    2308.8.2.1 I-Joist Frame: Floor and/or ceiling framing consisting of Engineered I-Joist shall have 5/8 Type X drywall placed at the underside of the joist with paper-tape embedded in compound over joints and covered in additional compound to provide protection of concealed space in accordance with NFPA 13.
20. Delete the provisions of Section 3411 "Accessibility for Existing Building" in its entirety. The design for accessibility shall comply with applicable provisions of the most current addition of the Illinois Accessibility Code and the Fair Housing Act.
21. Insert the date of August 1, 2004 in Section 3410.2 "Applicability."
22. Amend the provisions of Section 3412.2.3 "Additions" (pg.578) by adding paragraph Section 3412.2.3.1 "Fire Alarm Systems – Extension Installation" as follows:
    3412.2.3.1 Fire Alarm Systems – Extension Installation: An existing fire alarm system shall be extended to provide protection to any additions to the building. If no fire alarm system presently exists, and the addition or additions individually or in aggregate exceed 200 square feet, an approved fire alarm system shall be installed throughout the entire existing building and addition(s) thereto.
23. Add Exhibit A:

Exhibit A

Performance Guidelines for High Hazard Uses in the City of St. Charles

1. Specific location: The geographic location and distances to other structures, rivers, streams, and other use groups.
2. Zoning: The proximate distances to Assembly, Educational, Institutional, and Residential uses and vacant land zoned for these uses.
3. Types of hazardous materials which are not allowed: Materials listed in Section 307.3 High Hazard Group H-1 that present a detonation hazard shall not be permitted under any circumstances.
4. Allowable construction types: Type I and II only.
5. Required fire protection for High Hazard materials:
    a. Provide extra hazard Group II fire sprinkler system
    b. Provide a fixed foam fire protection system
6. Required water supply system: 3,000 to 6,000 gallons per minute from a reliable source.

(Ord. 2010-M-42 § 2; Ord. 2006-M-63 § 1; Ord. 2004-M-62 § 1.)

15.04.020 One family and two family residences-Regulations adopted and modified.

The provisions of the 2009 International Residential Code for One and Two Family Dwellings, published February 2009 by the International Code Council, Inc., 5203 Leesburg Pike, Suite 708, Falls Church, Virginia 22041-3401 (hereinafter sometimes referred to as "the IRC"), not less than three (3) copies of which have been and are on file in the Office of the Clerk of the City of St. Charles, Illinois, for more than thirty (30) days, together with the amendments listed herein, are hereby adopted as the regulations governing the construction of one and two family dwellings and townhouses not more than three stories in height.

Amendments to the 2009 International Residential Code for One and Two Family Dwellings:

Chapter 1 – Administration:

A. **Section R101.2 Scope:** Revise to read as follows:
R101.2 Scope. The provisions of the International Residential Code for One and Two Family Dwellings shall apply to the construction, alteration, movement, enlargement, replacement, repair, equipment, use and occupancy, location, removal, and demolition of detached one and two family dwellings not more than three stories in height with a separate means of egress and their accessory structures.

B. **Section R105.2 Work exempt from permit:** Delete this section.

C. **Section R105.2.3 Public service agencies:** Delete this section.

D. **Section R015.5 Expiration:** Revise to read as follows:
R105.5 Expiration. Every permit, except demolition permits, shall become invalid or void unless the work authorized by such permit is commenced within 180 days after its issuance, or if the work authorized by such permit is suspended or abandoned for a period of 180 days after the time the work is commenced. Demolition must commence within ten (10) days and completed within thirty (30) days of issuance, otherwise the permit becomes invalid. The Building Official is authorized to grant, in writing, one or more extensions of time, for any permits, for a period not more than 180 days each. The extension shall be requested in writing and justifiable cause demonstrated.

E. **Section R105.7 Placement of permit:** Revise to read as follows:
R105.7 Placement of permit. The building permit card shall be kept on the site of the work and be visible from the street until such time as a certificate of occupancy permit has been issued, or a final inspection has been performed.

F. **Section R106.1.3 Information for construction in flood hazardous areas:** Revise to read as follows:
R106.1.3 Information for construction in flood hazardous areas. For buildings and structures in flood hazard areas, as established on local floodway rate maps, locally adopted flood plain ordinances shall apply.

G. **Section R106.3.1 Approval of construction documents:** Revise to read as follows:
R106.3.1 Approval of construction documents. When the Building Official issues a permit, the construction documents shall be approved in writing or by stamp. One set of the approved construction documents as reviewed shall be retained by the Building Official. The other set shall be returned to the applicant and shall be kept on the site of the project and shall be open to inspection by the Building Official or his or her authorized agent/representative.

H. **Section R106.3.4 Pre-Application conference:** Add a new section to read as follows:
R106.3.4 Pre-Application conference. All applicants and owners seeking demolition permits for principal buildings on a lot or site shall first be required to attend a pre-application conference with the Building Official and other City staff as directed, for the purpose of discussing the City of St. Charles requirements for demolition and reconstruction.

I. **Section R109.1.3 Flood plain inspection:** Delete this section.

J. **Section R110.1 Use and occupancy:** Delete the exceptions.

K. **Section R110.3 Certificate issued:** Delete lines 3, 5, 7, 8, and 9.

Chapter 2 – Definitions:

A. **Change the stated term MANUFACTURED HOME to MANUFACTURED/MOBILE HOME.**

B. **Delete the stated definition of TOWNHOUSE and substitute therefore:**
TOWNHOUSE. A single family dwelling unit constructed in a group of 3, 4, 5 or 6 attached units in which each unit extends from foundation to roof and with open space on at least two sides. Dwelling units where more than six units are attached shall be governed by code provisions applicable to multiple family dwellings, rather than the provisions of this one and two family dwelling code.

Chapter 3 – Building Planning:

A. **Table R301.2 (1) Climatic and Geographic Design Criteria:** Revise to read as follows:

Ground Snow Load #per Square Foot	Wind Speed in MPH	Seismic Design Category f,g	Subject to Damage From				Winter Design Temps f	Flood Hazard h
			Weathering a	Frost Line Depth b	Termite c	Decay d		
30	**90**	**B**	**SEVERE**	**42”**	**M-H**	**S-M**	**-5f**	**Refer to Title 18, St. Charles Municipal Code**

See captions under Table R301.2 (1) in the book for exceptions and conditions of approvals.

B. **Section R301.2.4 Floodplain construction.** Delete this section.

C. **Section R302.1 Exterior walls:** Delete exceptions 1 & 2.

D. **Section R302.2 Townhouses:** Revise to read as follows:
R302.2 Townhouses. Each townhouse, as defined in this code, shall be constructed as a separate single-family dwelling unit and shall be separated by a minimum of an approved 2-hour rated masonry wall, which shall extend vertically from the foundation to the underside of the roof sheathing and horizontally the full length of the common wall. The number of single family dwelling units attached in this manner shall not exceed six (6).
Exception: When the complete building is provided with an approved residential fire sprinkler system, an approved 2-hour rated UL listed assembly can substitute for the 2-hour rated masonry wall.
(Ord. 2012-M-10 § 1.)

E. **Section R302.3 Two family dwellings:** Revise to read as follows:
R302.3 Two family dwellings. Dwelling units in two family dwellings shall be constructed as a separate single-family dwelling unit and shall be separated by a minimum of an approved 2-hour rated masonry wall, which shall extend vertically from the foundation to the underside of the roof

Note: text copy on 1-17
copy to .pdf Bookmarks/pages
Microsoft Word - 15.04 Building Code.docx
Microsoft Word - 15.04 Building Code.docx
Microsoft Word - 15.04 Building Code.docx

K. **Section 310.1 Emergency escape and rescue required:** Revise to read as follows:
R310.1 Emergency escape and rescue required. All basements and sleeping rooms shall have at least one openable emergency escape and/or rescue window or exterior door opening for emergency escape and/or rescue. Where windows are provided as a means of escape and/or rescue, they shall have a sill height of not more than 44-inches above the finished floor. Where a window(s) is provided as a means of egress and/or rescue from a basement or basement bedroom, they shall have a sill height not more than 36-inches above the finished floor. Where a door opening having a threshold below the adjacent ground elevation serves as an emergency escape and rescue opening and is provided with a bulkhead enclosure, the bulkhead enclosure shall comply with Section 310.3. The net clear opening dimension required by this section shall be obtained by the normal operation of the window or door opening from the inside. Escape and rescue window openings with a finish sill height below the adjacent ground elevation shall be provided with a window well in accordance with Section R310.2 of this Code.
(Ord. 2012-M-10 § 1.)

L. **Section R310.2.1 Ladder and steps:** Revise to read as follows:
R310.2.1 Ladder and steps. Window wells with a vertical depth greater than 36-inches below the adjacent ground level shall be equipped with a permanently affixed ladder or steps usable with the window in the full open position. Ladders and steps required by this section shall not be required with Section R314 and R315. Ladders or rungs shall have an inside width of at least 12-inches, shall project at least 3-inches from the wall, and shall be spaced not more than 18-inches on center vertically for the full height of the window well.
(Ord. 2012-M-10 § 1.)

M. **Section R311.2 Egress Door:** Revise to read as follows:
R311.2 Egress Door. Not less than two (2) exits with a minimum of one (1) exit conforming to this chapter shall be required from each dwelling unit. All such exits shall discharge at grade. The required exit doors shall not pass through a garage.
(Ord. 2012-M-10 § 1.)

N. **Section R311.7.5 Landings for stairways:** Revise to read as follows:
R311.7.5 Landings for stairways. A minimum of 3-foot by 3-foot landing shall be required on each side of an egress door. The floor or landing shall not be more than 1 1/2-inches lower than the top of the threshold.
Exception:
1. At the top of a flight of all stairs, provided the door does not swing over the stairs.
(Ord. 2012-M-10 § 1.)

O. **Section R313.1 Townhouse automatic fire sprinkler systems:** Revise to read as follows:
R313.1 Townhouse automatic fire sprinkler systems. An automatic residential fire sprinkler system shall be installed in townhouses.
Exception No. 1: An automatic residential fire sprinkler system shall not be required when additions or alterations are made to existing townhouses that do not have an automatic residential fire sprinkler system installed.
Exception No. 2: The requirement for the installation of automatic fire sprinkler systems in townhouses is deferred until January 1, 2013.
Exception No. 3: An automatic residential fire sprinkler system shall not be required where, as determined and certified by an approved fire protection engineer, the existing domestic water service system cannot meet the standards set forth for the installation of such system. The applicant shall reimburse the City for the actual cost of service invoiced to the City by the fire protection engineer.

R313.1.1 Design and installation. Automatic residential fire sprinkler systems for townhouses shall be designed and installed in accordance with Section P2904.
(Ord. 2012-M-10 § 1.)

P. **Section R313.2 One- and two-family dwellings automatic fire sprinkler systems:** Revise to read as follows:
R313.2 One- and two-family dwellings automatic fire systems. An automatic residential fire sprinkler system shall be installed in one-and two-family dwellings.
Exception No. 1: An automatic residential fire sprinkler system shall not be required for additions or alterations to existing buildings that are not already provided with an automatic residential sprinkler system.
Exception No. 2: The requirement for the installation of automatic fire sprinkler systems in one- and two-family dwellings is deferred until January 1, 2013.
Exception No. 3: An automatic residential fire sprinkler system shall not be required where, as determined and certified by an approved fire protection engineer, the existing domestic water service system cannot meet the standards set forth for the installation of such system. The applicant shall reimburse the City the actual cost of service invoiced to the City by the fire protection engineer.
R313.2.1 Design and installation. Automatic residential fire sprinkler systems shall be designed and installed in accordance with Section P2904 or NFPA 13D.
(Ord. 2012-M-10 § 1.)

Q. **Section R311.7.7 Handrails:** Revise to read as follows:
R311.7.7 Handrails. Handrails shall be provided on at least one side of each continuous run of treads or flight with more than three (3) or more risers.
(Ord. 2012-M-10 § 1.)

R. **Section R314.3 Locations:** Revise to read as follows:
R314.3 Locations. Single and multiple-station smoke alarms shall be installed in the following locations:

a. In each sleeping room.
b. Outside of each separate sleeping room or area, within 15 feet of all bedrooms.
c. On each additional story of the dwelling, including basements and cellars, but not including crawl spaces and uninhabitable attics.
d. In dwellings or dwelling units with split-levels. For the purpose of this section each split-level shall be considered a story.

When more than one (1) smoke alarm is required to be installed within an individual dwelling unit, the alarm devices shall be interconnected in such a manner that the actuation of one (1) alarm will activate all of the alarms in the dwelling unit. The alarm shall be clearly audible in all bedrooms over background noise levels, with all intervening doors closed.
All smoke alarms shall be listed and installed in accordance with the provisions of this code and the household fire warning provisions of NFPA 72.
(Ord. 2012-M-10 § 1.)

S. **Section R317.1.2 Ground contact:** Revise to read as follows:
R317.1.2 Ground contact. Supports for permanent structures intended for human occupancy and which come in contact with the ground shall not be constructed of wood.
(Ord. 2012-M-10 § 1.)

T. **Section R317.1.4 Wood columns:** Revise to read as follows:

R317.1.4 Wood columns. Posts, poles, and columns supporting structures that are embedded in concrete, in direct contact with the earth or are embedded in concrete exposed to the weather are prohibited.
(Ord. 2012-M-10 § 1.)

U. **Section R322 Flood resistant construction:** Delete this section.
(Ord. 2012-M-10 § 1.)

Chapter 4 – Foundations:

A. **Section R401.1 Application:** Amend to read as follows:
R401.1 Application. The provisions of this Chapter shall control the design and construction of the foundation and foundation spaces of all buildings and structures.

B. **Section R402.1, 402.1.1, 402.1.2:** Delete these sections.

C. **Section R403.1 General:** Delete the words "wood foundation" within the first sentence.

D. **Section R403.1.1 Minimum size:** Amend to read as follows:
R403.1.1 Minimum size. Minimum sizes for concrete and masonry footings shall be as follows. Footing width shall be a minimum of twice and width of the wall it is supporting, or a minimum of 18-inches, whichever is greater. Unless soil conditions warrant a greater width, or so designed and certified by a license design professional, footing projections shall be equal to 1/4 the width of the footing and the wall must fit center on the footing. Single story structures may be placed on 10-inch wide by 42-inch deep trench footing. Footing thickness shall be a minimum of 8 inches or the same depth as the wall thickness, whichever is greater, or as designed by a licensed design professional. See Figure R403.1 (1) for an illustration.

E. **Table R403.1 Minimum width of concrete or masonry footings (inches):** Delete this table.

F. **Figure R403.1 (1) Concrete and masonry foundation details:** Delete this figure and substitute the following therefore:

Figure R403.1 (1)
Concrete and Masonry Foundation Details

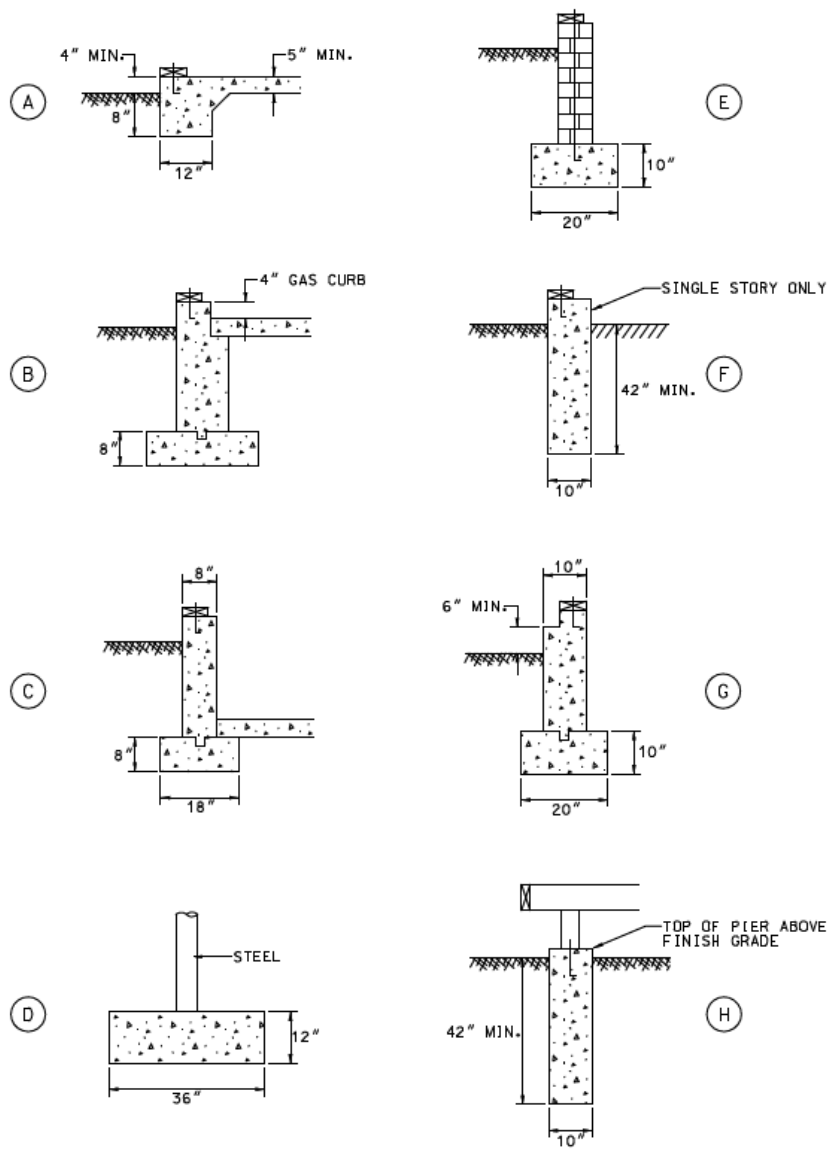

A= Typical turned down garage slab.
B= Typical foundation detail for attached garage with gas curb.
C= Typical footing and wall detail.
D= Typical pier pad for lolly column in basement.
E= Typical footing and wall detail for masonry block wall.
F= Typical trench foundation.
G= Typical wall and footing for brick veneer home.
H= Typical posthole detail for deck.

G. **Figure R403.1 (2) Permanent Wood Foundation Basement Wall section:** Delete this figure.

H. **Figure R403.1 (3) Permanent Wood Foundation Crawl Space section:** Delete this figure.

I. **Section R403.2 Footings for Wood Foundations:** Delete this figure.

J. **Section R404.1.5.3 Pier and Curtain Wall Foundations:** Delete this section.

K. **Section R404.2 Wood Foundation Walls:** Delete this section.

L. **Sections R404.2.2 Stud Size and R404.2.3 Height of Backfill:** Delete these sections.

M. **Table R404.2.3 Plywood Grade and Thickness for Wood Foundation Construction:** Delete this table.

N. **Sections R404.2.4 Backfilling; R404.2.5 Drainage and Damp Proofing; and R404.2.6 Fastening:** Delete these sections

O. **Sections R405.2 and R405.2.1 through R405.2.3 Wood Foundations:** Delete these sections.

P. **Sections R406.3 Damp Proofing of Wood Foundations: R406.3.1, R406.3.2, R406.3.3, and R406.3.4:** Delete these sections.

Q. **Section R407.1 Wood Column Protection:** Delete this section.

R. **Section R408.4.1 Crawl Space Floor:** Add a new section to read as follows:
R408.4.1 Crawl Space Floor. A minimum of a 2-inch thick slush coat of poured concrete shall be installed over a minimum of 4-inch thick stone in the crawl space, with a minimum of a six (6) mil thick polyethylene film moisture barrier with all joints lapped a minimum of 6 inches.

Chapter 5 – Floors:

A. **Section R502.1.4.1 Fire Protection. Prefabricated Wood I-Joists:** Add a new section to read as follows:
R502.1.4.1 Fire Protection. Prefabricated Wood I-Joists. When prefabricated wood I-Joists are used and there is usable space above and below a floor/ceiling assembly, the assembly shall be protected from fire impingement by one of the following:
1. The minimum application of one layer of 5/8-inch drywall and draft stopped per Section 502.12 of the 2009 International Residential Code.
2. The installation of an approved sprinkler system.

A1. **Section R502.1.4.2 Fire Protection. Engineered wood joists or open web floor trusses:** Add a new section to read as follows:
R502.1.4.2 Fire Protection. Engineered wood joists or open web floor trusses. When engineered wood joists or open web floor trusses are used and there is usable space above and below a floor/ceiling assembly, the assembly shall be protected from fire impingement by one of the following:
1. The minimum application of one layer of 5/8-inch type X drywall and draft stopped per a Section 502.12 of the 2009 International Residential Code.
2. The installation of an approved automatic residential fire sprinkler system.

(Ord. 2012-M-10 § 2.)

B. **<u>Section R502.7.1 Bridging</u>:** Amend to read as follows:
R502.7.1 Bridging. Joists shall be supported laterally by solid blocking, or diagonal bridging (wood or metal) at intervals not exceeding 8 feet.

C. **<u>Section R502.11.4 Truss Design Drawings</u>:** Amend to read as follows:
R502.11.4 Truss Design Drawings. Truss design drawings shall be submitted to and approved by the Building Official prior to a permit being issued for the structure. Truss design drawings shall be provided with the shipment of trusses to the job site. These truss design drawings shall include, at a minimum, the information specified below:

1. Slope or depth, span, and spacing;
2. Location of all joints;
3. Required bearing widths;
4. Design loads as applicable;
   - 4.1 Top cord live load (including snow load)
   - 4.2 Top cord dead load
   - 4.3 Bottom cord live load
   - 4.4 Bottom cord dead load
   - 4.5 Concentrated loads and their points of application
   - 4.6 Controlling wind and earthquake loads
5. Adjustments to lumber and joint connector design values for conditions of use;
6. Each reaction force and direction;
   Joint connector type and description (e.g. size, thickness, or gauge) and the dimensioned location of each joint connector except where symmetrically located relative to the joint interface;
7. Lumber size, species and grade for each member;
8. Connection requirements for:
   - 9.1 Truss-to-truss girder
   - 9.2 Truss ply-to-ply
   - 9.3 Field splices
9. Calculated deflection ratio and/or maximum description for live and total load;
10. Maximum axial compression forces in the truss members or enable the building designer to design the size, connections, and anchorage of the permanent, continuous lateral bracing. Forces shall be shown on the truss drawing or on supplemental documents;
11. Required permanent truss member bracing location; and
12. Layout design.

D. **<u>Section R504 Pressure Preserved Treated Wood Floors (on ground)</u>:** Delete this section.

E. **<u>Section R506.1 General</u>:** Amend to read as follows:
R506.1 General. Concrete slab-on-ground floors shall be a minimum 4 inches thick with a minimum of 6x6 welded wire fabric embedded in the mid cross section of the slab. The compressive strength of concrete shall be as set forth in Section R402.2. Fiber mesh can be used in place of welded wire.

F. **<u>Section R506.2.1.1 Back-Fill in Garages (attached)</u>:** Add a new section to read as follows:
R506.2.1.1 Back-Fill under Concrete Garage Floors (attached). The sub-base for poured concrete garage floors shall be undisturbed inorganic soil. All fill material shall be clean graded sand, crushed stones, or gravel. The use of any soils as fill material is prohibited. Compacted non-organic material can be used with dowelling #4 rebar into the foundation wall a minimum of 4 inches extending into the garage floor area a minimum of 3 feet, placed 24 inches on center around

the three (3) walls forming the garage area, may be used. Any practice of soaking the soils within this area will be done in strict conformance with the locally applicable water conservation ordinance and shall be metered.

Chapter 6 – Wall Construction:

A. **Section R602.2 Grade:** Amend to read as follows:
R602.2 Grade. Studs shall be a minimum No. 2, standard or stud grade lumber.

B. **Section R602.3.2 Top Plate:** Delete the exception.

C. **Table 602.10.2 Intermittent Bracing Methods:** Delete methods number four (4) **SFB** and five (5) **GB**.

Chapter 7 – Wall Covering:

No Changes.

Chapter 8 – Roof-Ceiling Construction:

A. **Section R802.10.1 Truss Design Drawings:** Amend to read as follows:
R802.10.1 Truss Design Drawings. (See Section R502.11.4, as amended by this ordinance.)

Chapter 9 – Roof Assemblies:

A. **Section R905.2.7.1 Ice Barrier:** Amend to read as follows:
R905.2.7.1 Ice Barrier. On all new roof construction and roof tear offs an ice protection barrier that consists of a self-adhering polymer modified bitumen sheet shall be used in lieu of normal underlayment and extend from the eave's edge to a point at least 24 inches inside the exterior wall line of the structure.

Chapter 10 – Chimneys and Fireplaces:

A. **Section R1003.9 Termination:** Amend to read as follows:
R1003.9 Termination. Chimneys shall extend at least 2 feet higher than any portion of a building within 10 feet, but shall not be less than 3 feet above the point where the chimney passes through the roof. All wood or solid fuel burning fireplaces and stoves shall be equipped with an approved spark arrestor.

Chapter 11 – Energy Efficiency:

No Changes.

Chapter 12 – Mechanical Administration:

No Changes.

Chapter 13 – General Mechanical System Requirements:

A. **Section M1307.3.2 Heating Units in Garages:** Add a new section to read as follows:

M1307.3.2 Heating Units in Garages. Units designed to heat the habitable space of the home shall not be located in a garage.

Chapter 14 – Heating and Cooling Equipment:

No Changes.

Chapter 15 – Exhaust Systems:

No Changes.

Chapter 16 – Duct Systems:

A. **Section M1602.2.1 Return Air Vents:** Add a new section to read as follows:
M1602.2.1 Return Air Vents. Return air vents connected to the heating and cooling system, shall be located in every habitable room of the home, except as prohibited in Section M1602.2 of the code.

Chapter 17 – Combustion Air:

No Changes.

Chapter 18 – Chimney and Vents:

No Changes.

Chapter 19 – Special Fuel – Burning Equipment:

No Changes.

Chapter 20 – Boilers/Water Heaters:

No Changes.

Chapter 21 – Hydronic Piping:

No Changes.

Chapter 22 – Special Piping and Storage Systems:

A. **Delete Chapter 22 in its entirety.**

Chapter 23 – Solar Systems:

No Changes.

Chapter 24 – Fuel Gas:

No Changes.

Chapters 25 through 32 – Plumbing:

A. To the extend there is any conflict between the provisions of Chapters 25 through 32 with the most current State of Illinois Plumbing Code as adopted and/or amended by the City of St. Charles, the most stringent provision shall apply.
(Ord. 2012-M-10 § 3.)

Chapters 33 through 42 – Electrical:

No Changes.

Chapter 43 – Referenced Standards:

No Changes.

Appendix Adoption:

Adopt the following Appendices:

Appendix A – Sizing and Capacities of Gas Piping
Appendix B – Sizing of Venting Systems – Appliances
Appendix C – Exit terminals of Mechanical Venting Systems
Appendix D – Procedure for Safety Inspection – Existing Appliances
Appendix F – Radon Control Systems – Delete Figure AF102
Appendix G – Swimming Pool, Spas, and Hot Tubs
Appendix J – Existing Buildings and Structures
Appendix K – Sound Transmissions
Appendix M – Home Day Care R-3 Occupancy

Delete the following Appendices:

Appendix E – Manufacturing Housing used as Dwellings
Appendix H – Patio Covers
Appendix I – Private Sewage Disposal
Appendix L – Permit Fee
Appendix N – Venting Methods (Plumbing)
Appendix O – Gray Water Recycling Systems
Appendix Q – Cross Reference – ICC International Residential Code Electrical Provisions/National Electrical Code

(Ord. 2010-M- 43 § 1; Ord. 2003-M-6 § 1; Ord. 1997-M-140 § 1; Ord. 1983-M-14 § 1 (part); Ord. 1978-M-19 § 1 (part): prior code § 13.102.2.)

15.04.030 International Mechanical Code 2009 – Regulations adopted and modified.

The provisions of the 2009 International Mechanical Code issued by the International Code Council Inc., 4051 West Flossmoor Road, Country Club Hills, Illinois 60478 not less than three (3) copies of which have been and are on file in the Office of the Clerk of the City of St. Charles, Illinois, for more than thirty days, together with the amendments listed herein, are hereby adopted.

Amendments to the 2009 International Mechanical Code:

Chapter 1 Administration – Delete the provisions of Section 106.4.3 “Expiration”; Section 106.4.4 “Extensions”; Section 106.5.3 “Fee Refunds”; Section 108.4 “Violation Penalties”; and Section 109 “Means of Appeal” as the City has adopted a separate Administrative Code under Municipal Code Chapter 15.101.

(Ord. 2010-M-45 § 1; Ord. 2004-M-63 § 1; Ord. 1993-M-59 § 1.)

15.04.035 International Fuel Gas Code 2009 – Regulations adopted and modified.

The provisions of the 2009 International Fuel Gas Code issued by the International Code Council Inc., 4051 West Flossmoor Road, Country Club Hills, IL 60478, not less than three (3) copies of which have been and are on file in the Office of the Clerk of the City of St. Charles, Illinois for more than thirty (30) days, together with the amendments listed herein, are hereby adopted.

Amendments to the 2009 International Fuel Gas Code:

1. Chapter 1 Scope and Administration. The City has adopted a separate Administrative Code under the Municipal Code Chapter 15.101.
   a. Section 106.5.3 "Expiration" – Delete in its entirety
   b. Section 106.5.4 "Extensions" – Delete in its entirety
   c. Section 106.6.3 "Fee Refunds" – Delete in its entirety
   d. Section 108.4 "Violation Penalties" – Delete in its entirety
   e. Section 109 "Means of Appeal" – Delete in its entirety
2. Chapter 4 Gas Piping Installations:
   a. Section 403.4.4 "Aluminum" – Delete in its entirety
   b. Section 403.5.3 "Aluminum Tubing" – Delete in its entirety
   c. Section 403.5.4 "Corrugated Stainless Steel Tubing" – Delete in its entirety.

(Ord. 2010-M-46 § 1; Ord. 2004-M-64 § 1.)

15.04.040 National Electrical Code 2008 – Regulations Adopted and Modified.

The provisions of the 2008 Edition of the National Electrical Code, NFPA 70, issued by the National Fire Protection Association, Inc., One Batterymarch Park, Quincy, Massachusetts, 02269 (hereinafter sometimes referred to as the "NEC") not less than three (3) copies of which have been and are on file in the Office of the Clerk of the City of St. Charles, Illinois, for more than thirty (30) days, together with the amendments listed herein, are hereby adopted.
(Ord. 2010-M-47 § 1; Ord. 2003-M-79 § 1; Ord. 1997-M-140 § 2; Ord. 1993-M-59 § 1.)

15.04.045 Amendments to the 2008 National Electric Code NFPA 70.

1. **Section 110.13 (A) Mounting:** Add a new paragraph to read as follows:
   (A) Mounting. All electric panels mounted on concrete or masonry walls that are either exterior walls or below grade, shall have a minimum of 1/2 inch plywood installed behind the panel, or the panel shall be mounted to structural mounting channel that provides a minimum 1/2 inch airspace between the panel and the wall, for the purposes of support and to help prevent moisture entering the panel. Such mounting shall allow panel replacement if required.
2. **Section 210.70 Lighting Outlets Required:** Add a new paragraph to read as follows:
   (D) Illumination of Mechanical Equipment. All occupancies shall have luminaries installed within four (4) feet of the front of all electric panels and within four (4) feet of mechanical heating equipment to enable servicing the equipment.
3. a. **Section 230.2 Number of Services, (B) Special Occupancies:** Add new paragraph to read as follows:
   (B) Special Occupancies. Multiple-occupancy buildings will have either an external building main disconnect, a key operated shunt trip main disconnect, or parallel key operated shunt trip main disconnects for all services supplied to the building. Parallel shunt trip key operated main disconnects must be provided and installed in a manner approved by the St. Charles Electric Utility.

b. **Section 230.3 One Building or Other Structures Not to be Supplied Through Another:** Revise by deleting and substituting the following:
230.3 One Building, or Other Structure, or Tenant Space, Not to be Supplied Through Another, Service conductors, feeders, or branch circuits of one building, or other structure, or tenant space shall not pass through the interior of another building, or structure, or other space.

c. **Section 230.6 Conductors Considered Outside the Building:** Add new paragraph to read as follows:
(5) Installed in any "common area" (hallway, corridor or common space accessible to multiple premises) that meets the construction requirements of a one-hour fire rating. Conductors shall be installed in solid metal raceway pipe within "common areas" and shall have a label every five (5) feet identifying the conductors within the conduit.

d. **Section 230.46 Spliced Conductors:** Revise by deleting and substituting the following:
230.46 Spliced Conductors. Splices in service entrance conductors, other than those installed by the Electric Utility, are not allowed.

e. **Section 230.70 General (A) Location, (1) Readily Accessible Location:** Revise by deleting and substituting the following:
(1) Readily Accessible Location. Service disconnecting means shall be provided either outside the building or via remote control at the Fire Control Panel and shall have provisions to allow the service to be locked open. Each building/tenant space shall have a main disconnect incorporated within the main distribution panel inside the space.

f. **Section 230.70 General (A) Location:** Add new paragraph to read as follows:
(4) Maximum Distance. Service conductors installed inside a building without over current protection shall not exceed five (5) feet in length.

g. **Section 230.79 Rating of Service Disconnecting Means (C) One Family Dwelling, (D) All Others:** Revise by deleting and substituting the following:
(C) One or Two Family Dwelling. All panel board installations for new single-family detached dwellings shall be a minimum of 200-ampere rated. The main service disconnecting means (circuit breaker or fused switch) shall be 200-ampere rated.
(D) Multi-family and Single-family Attached Dwellings. All panel board installations for new multi-family dwellings and new single family attached three (3) units or more dwelling units shall be a minimum of 100-ampere rated. The main service disconnecting means (circuit breaker or fused switch) shall be a minimum of 100-ampere rated.
(E) All Others. For all other installations, the service disconnecting means shall have a rating of not less than 60-ampere, unless approved by the City of St. Charles Municipal Electric Utility.

4. **Section 250.118 Types of Equipment Grounding Conductors:** Revise by deleting and substituting the following
250.118 Types of Equipment Grounding Conductors. The equipment grounding conductor must be a separate conductor run with the circuit conductors unless given exemption by the City of St. Charles Municipal Electric Utility or an approved certified testing agency.

5. a. **Section 300.1 Scope (A) All Wiring Installations:** Add new paragraph to read as follows:
(1) With the exception of one and two family dwellings, all current carrying conductors exceeding 50 volts shall be installed in rigid metal conduit, intermediate metallic conduit, electrical metallic tubing **or** flexible metallic tubing with the exception that PVC conduit can be used for corrosive or other special application areas.

b. **Section 300.5 Underground Installations, (D) Protection from Damage, (3) Service Conductors:** Revise by deleting and substituting the following:
(3) Service Conductors. Residential underground service conductors shall be installed in minimum Schedule 40 PVC. All other underground service conductors shall be installed in conduit that is encased in concrete unless given exemption by the City of St. Charles Municipal Electric Utility.

c. **Table 300.5 Minimum Cover Requirements, 0 to 600 Volts, Nominal, Burial in Millimeters (Inches):** Delete the third row table entries related to Under A Building.

d. **Table 300.5 Minimum Cover Requirements, 0 to 600 volts, Nominal, Burial in Millimeters (Inches):** Revise by deleting and substituting the fourth row to read as follows:
Table 300.5 Minimum Cover Requirements, 0 to 600 Volts, Nominal, Burial in Millimeters (Inches). Under minimum of 102 mm (4 inch) thick concrete interior or exterior slab with no vehicular traffic and the slab extending not less than 152 mm (6 inch) beyond the underground installation.

6. **Section 310.2 Conductors, (B) Conductor Material:** Revise by deleting and substituting the following:
(B) Conductor Material. Other than service conductors provided by the Utility, or Aerial, all service, feeder, and branch circuit conductors shall be copper.

7. a. **Section 314.3 Nonmetallic Boxes, 314.17 Nonmetallic Boxes and Conduit Bodies, 314.43 Nonmetallic Boxes, and 334.40 (A) Boxes of Insulating Materials:** Delete these sections.

b. **Section 334.40 (b) Devices of Insulating Material:** Revise by deleting and substituting the following:
(B) Devices of Insulating Material. Application of non-metallic equipment can be used for corrosive or other special application areas.

8. **Section 695.3 Power Source(s) for Electric Motor-Driven Fire Pumps, (B) Multiple Sources:** Add new paragraph to read as follows:
(4) Signage. Where a generator provides a secondary source for a fire pump, and the generator feeds other systems, clearly marked key operated shunt trip switch/es must be provided at the fire panel allowing Fire Department personnel the ability to open main breakers to panels not feeding the fire pump.

9. **Section 700.16 Emergency Illumination:** Add new paragraph to read as follows:
(1) Additional spaces that require emergency lighting shall include all restrooms and mechanical rooms.

10. a. **Article 701 Legally Required Standby Systems, I General, Section 701.7 Transfer Equipment:** Add new paragraph to read as follows:
(D) Transfer Equipment Requirements: Open type transfer switches are the only approved method for connection of standby systems. All transfer switch connections shall be "break before make" to insure the complete separation from the utility system and the generator supply. No parallel operation with the utility system shall be allowed. A minimum time delay of three (3) seconds and a maximum of ten (10) seconds after loss of utility power should be established before starting the generator. Utilization of Kirk Key systems or other mechanical means of isolating generating sources from the utility source are not allowed.

b. **Article 701 Legally Required Standby Systems, III Sources of Power, Section 701.11 Legally Required Standby Systems (B) Generator Set:** Add new paragraph to read as follows:
(6) Generator Noise Output. The maximum noise level allowable within ten (10') feet of transformer, switchgear, or other specified equipment operated by the City of St. Charles Municipal Electric Utility (SCMEU) is 80dBA. Sound enclosures or sound

barrier walls or other sound mitigation may be required if the noise level near SCMEU equipment exceeds 80dBA. Analysis of the need for sound abatement equipment will be performed by the City of St. Charles Municipal Electric Utility personnel after the generator is installed and tested.

(Ord. 2010-M-47 § 1; Ord. 2003-M-79 § 2.)

15.04.050 Plumbing Code: Adopted – Modifications

The provisions of the 2004 Edition of the Illinois Plumbing Code compiled by the Illinois Department of Public Health, not less than three (3) copies of which have been and are on file in the Office of the Clerk of the City of St. Charles, Illinois, for more than thirty (30) days, are hereby adopted together with the amendments listed below modifying said Illinois Plumbing Code, as the regulations governing the installation of plumbing in and around buildings within the jurisdiction of the City of St. Charles.

Amendments to the Illinois Plumbing Code – 2004 Edition.

1. Section 890.170 – Revise by deleting and substituting the following:
   Section 890.170 Sewer and/or Water Required. Each building which is intended for human habitation or occupancy shall have a connection to a public water system and a connection to a public sewer system. Provided, however, that if a public water or public sewer system is not available and accessible within two-hundred (200') feet of the property line of the structure to be served, as determined by the Building & Code Enforcement Division Manager, the owner may connect to a private water well constructed in accordance with the requirements of Illinois Water Well Construction Code 77 Illinois Administrative Code 920 and the St. Charles Municipal Code, Title 13, "Public Utilities," Chapter 13.16, "Water;" and/or a private sewage disposal system constructed in accordance with the requirements of the 77 Illinois Administration Code 905 and the St. Charles Municipal Code, Title 13, "Public Utilities," Chapter 13.12, "Sewers." All installations shall be in accordance with applicable state and local laws, ordinances, resolutions, rules and regulations and codes."
2. Section 890.520 b) Gasoline, Oil and Flammable Liquids, revise to read:
   b) Interceptors/Separators Required.
   All facilities which generate oil and/or flammable waste shall be provided with floor drains or trench drains connected to an approved gas and oil interceptor. All residential garages with floor drains shall have proper size interceptor regardless of size of garage.

   Enclosed loading docks, commercial vehicle storage or repair garage and gasoline stations with grease racks or pits and all facilities that have oil and/or flammable waste shall be provided with floor drains. Floor drains provided for such areas shall be intercepted by an approved interceptor or a series of three (3) basins before discharging into the building drainage system and shall be of cast iron or equally durable materials. Each interceptor or basin shall be provided with a heavy metal cover that shall be bolted into place and made gas and water tight with a soft metal gasket. Each interceptor and, if provided with separate compartments, each compartment and basin shall be provided with a vent of not less than two (2") inches. Two or more vents may be connected to a header that shall be six (6") inches or higher than the lowest floor drain served. The vent shall extend independently to the outer air. The outlet of an interceptor or each basin shall be properly trapped. Floor drains above the level of the interceptor or basins shall connect to a stack extending independently to the outer air.

   Where it is required by this Section to have interceptors/separators, individual units shall be installed and maintained as a single user system. The interconnecting of piping from one (1)

building to another or from one (1) unit to another where such units are separated by an approved firewall assembly is prohibited.

3. Section 890.520 d) General Requirements, add a paragraph 10) as follows:
   10) Where it is required by this Section to have interceptors/separators, individual units shall be installed and maintained as a single user system. The interconnecting of piping from one (1) building to another or from one (1) unit to another where such units are separated by an approved firewall assembly is prohibited.
4. Section 890.630 Installation, add a paragraph j) as follows:
   j) A safe pan or an approved drainage system is required for any floor (exception of basement level) clothes washer and water heater installations and above ceiling water heater and furnace installations.
5. Section 890.1130 d) Fire Safety Systems, add a paragraph 4) as follows:
   4. The installation of a fire safety system involving the potable water system shall be in accordance with NFPA Standard No. 13 (1975) and the potable water supply system shall be protected against backflow or back siphonage by a minimum of a double check valve assembly. If a fire department connection is part of the fire safety system; the potable water supply system must be protected by an approved backflow device.
6. Section 890.1320 Drainage System Installation, add paragraph p) and q) as follows:
   p) Underground plumbing must have proper support and anchor system in order to maintain proper drainage.
   q) Compliance with the St. Charles Municipal Code, Title 13 "Public Utilities", Chapter 13.12 "Sewers", Section 13.12.201 "Overhead Sanitary Sewers" is required.
7. Section 890.1340 Determination of Sizes for Drainage System, revise paragraph (b) to read:
   b) Minimum Size of Building Drain, Horizontal Branches, Drainage Piping
   1. No portion of the drainage system installed underground or below a basement or cellar shall be less than four (4) inches in diameter.
8. Section 890.1440 Vent terminal size, revise a) to read:
   a) Minimum Size of Stack Vent. Each structure in which building drains are installed shall have one (1) stack vent not less than three (3") inches in diameter. The stack vent shall be increased by one size through the roof, but in no case shall any vent be less than four (4") inches where it passes through the roof to the outside atmosphere. See Appendix A, Table H.

(Ord. 2010-M-48 § 1; Ord. 2006-M-58 § 1-4; Ord. 2003-M-5 § 1; Ord. 1997-M-140 § 2; Ord. 1991-M-3 § 1; Ord. 1982-M-14 § 1; Ord. 1978-M-19 § 1 (part): prior code § (3.102.5.)

15.04.060 Building permit - required.

It is unlawful to construct any building or structure in the city where the cost of such construction exceeds one hundred dollars or to alter or remodel any building or structure so as to change the bearing walls, beams, supports, or the roof thereof, without having first procured a permit therefore.
(Ord. 1978-M-21 § 1 (part): prior code § 13.101.)

15.04.090 Architectural committee - created - composition - duty.

There is created an architectural committee to consist of three members who shall be appointed for a term of three years by the mayor by and with the advice and consent of the city council. It shall be the duty of such committee to assist the building commissioner in ascertaining if the plans required in Section 15.04.070 comply with the provisions of the ordinances relating to the construction of buildings.
(Prior code § 13.104.)

15.04.105 Flood damage prevention.

The requirements under Title 18, Flood Damage Prevention, shall be followed in connection with all proposed construction, substantial improvements, or other development within floodplain areas.
(Ord. 1981-M-32 § 6.)

15.04.120 Time limit.

No building permit shall be valid for a period of more than one year from the date of issuance. (Prior code § 13.108.)

Chapter 15.08

STANDARDS FOR NEW CONSTRUCTION, ALTERATIONS AND REPAIRS

Sections:

15.08.010 Purpose.
15.08.020 Scope.
15.08.030 Requirement by occupancy.
15.08.040 Life and safety factors.
15.08.050 Definitions.
15.08.100 Maintenance of devices or safeguards.
15.08.160 Commercial building - Exterior doors.
15.08.170 Commercial building - Accessible windows.
15.08.180 Commercial building - Ventilating openings.
15.08.190 Commercial building - Roof openings.
15.08.200 Commercial building - Entrance doors to individual offices of multiple- occupancy building.
15.08.210 Commercial building - Safes.
15.08.220 Commercial building - Intrusion detection devices.
15.08.230 Private dwelling - Exterior doors.
15.08.240 Private dwelling - Sliding glass doors.
15.08.250 Private dwelling - Window protection.
15.08.260 Multiple dwelling - Exterior doors.
15.08.270 Multiple dwelling - Garage doors.
15.08.280 Multiple dwelling - Entrance doors to individual units.
15.08.290 Multiple dwelling - Sliding glass doors.
15.08.300 Multiple dwelling - Window protection.
15.08.310 Multiple dwelling - Illumination.

15.08.010 Purpose.

The purpose of this chapter is to provide minimum standards to safeguard property and public welfare from crime by regulating and controlling the design, construction, quality of materials, use and occupancy, location and maintenance of all buildings and structures within the city and certain equipment specifically regulated herein. (Ord. 1978-M-48 § I Art. 1.)

15.08.020 Scope.

The provisions of this chapter shall apply to:

A. All new construction;

B. All additions, alterations, or repairs to any existing building or structure in the commercial and multiple - dwelling class;

C. The entire building or structure when additions, alterations or repairs made within any twelve-month period exceed fifty percent of the replacement value of the existing building or structure.

(Ord. 1978-M-48 § I Art. 2.)

15.08.030 Requirement by occupant.

The provisions of this chapter shall apply to all zoning districts. (1978-M-48 § I Art. 10.)

15.08.040 Life and safety factors.

No portion of this chapter shall supersede any other city of federal laws, regulations, or the National Fire Protection Life Safety Code, 1976 Edition or the American Insurance Association Fire Protection Code, 1976 Edition. (Ord. 1978-M-48 § I Art. 11.)

15.08.050 Definitions.

For the purpose of this chapter, certain terms are defined as follows:

A. "Accessible" refers to any opening in the exterior of a building larger than eight inches by twelve inches; e.g., door, window, transom, vent, duct, skylight, etc. that is within either:
   1. Eighteen feet from the ground or the roof of an adjoining structure;
   2. Fourteen feet from, directly or diagonally, opposite windows, fire escapes, or ledges;
   3. Within four feet of another opening larger than eight inches by twelve inches, fire escapes, or ledges in or projecting from the dame wall, or an adjacent wall and leading to another building or structure.

B. "Burglar-resistant glazing material" means glass and glass like materials that shall comply with or exceed the Underwriters' Laboratories Standard #UL972 for burglary-resisting glazing material as follows: withstand the impact of a five-pound steel ball dropped from a height of forty feet and five impacts from a height of teen feet concentrated within a five-inch diameter area of the surface without release from the frame.

C. "Central station" means a system in which the operations of electrical protection circuits and devices are signaled automatically to, recorded in, maintained and supervised by, a central station having trained operators and/or guards, who are employees of the Alarm Servicing and Installation Company, in attendance at all times. Guards are dispatched and/or the police dispatch center is notified of the signal received.

D. "Combination deadlatch and dead bolt" means a device combining a deadlatch operable by knobs from inside and outside by a key, both of which can be retracted from the inside by turning the knob and from the outside by a key.

E. "Commercial building" means any building or structure which is not defined in this section as either a private dwelling or a multiple dwelling including, but not limited to, stores, factories, warehouses, office buildings, institutions, schools, and places of amusement.

F. "Cylinder guard" means a hardened steel ring or plate surrounding the otherwise exposed portion of a cylinder lock to prevent cutting, prying, pulling, or wrenching with common tools.

G. "Dead bolt" means a bolt which has no automatic spring action and which is operated by a key, thumbturn, or lever and is positively held fast in the protection position.

H. "Double cylinder dead bolt" means a dead bolt lock actuated by a key from the inside and outside.

I. "Deadlatch" means a latch which is positively held in latched position with a strike by an added integral bolt-type mechanism and is released by a key from the outside and a knob or similar actuator from the inside.

J. "Door scope" means a system of lenses encased for convenient installation in entrance doors permitting an inside viewer to observe a one hundred eighty degree area of the outside with the door closed.

K. "Insert" means a hardened steel roller inside unhardened bolts to prevent bolt cutting with common tools.

L. "Latch" means a spring-loaded device which automatically holds a swinging door shut upon closing by engaging a strike and which is released by turning a knob, lever or similar actuator from inside or outside.

M. "Louvers" means a series of removable fixed, slated, or movable slats. Glass louvers is descriptive of jalousies. Glass, wood or metal jalousies are considered to be louvers. Awning windows having sections more than twelve inches in depth are not considered to be louvers.

N. "Multiple dwelling" means any building or structure used to provide sleeping accommodations for more than one family unit or person who are not being detained involuntarily for medical or other care or treatment including but not limited to, hotels, motels, rooming houses, dormitories, apartments, duplexes, and townhouses.

O. "Multiple point locks" means a system of lever-operated bolts that engage a door opening, at least at the head and sill, operated by a single knob or handle from the inside and optionally a cylinder locked handle from the outside.

P. "Private dwellings" means any building or structure used as a residence by one family unit.

Q. "Single-cylinder dead bolt" means a dead bolt lock activated from the outside by a key and from the inside by a knob, thumbturn, lever, or similar actuator.

R. "Sliding door dead bolt" means a single dead bolt which, after penetration of the strike, expands or is pivoted hook-type to resist sliding of the door by force.

S. "Strike" means a stationary metal plate designed to momentarily depress a moving latch for final secure engagement requiring a separate operation for disengagement.

T. "Rated" means as listed by Underwriters' Laboratory.

(Ord. 1978-M-48 § I Art. 12.)

15.08.100 Maintenance of devices or safeguards.

All devices or safeguards which are required by this chapter in a building, when erected, altered, or repaired, shall be maintained in good working order. The owner or his/her agent shall be responsible for the maintenance of such devices or safeguards. (Ord. 1978-M-48 § I Art. 3.)

15.08.160 Commercial building - exterior doors.

Any building requiring panicproof hardware locks on exit doors shall be exempt from the exterior door locking security.

A. A single door shall be secured with either a double cylinder or single cylinder dead bolt without a turnpiece with a minimum throw of one inch. Any dead bolt must contain hardened material to repel attempts at cutting through the bolt.

B. On pairs of doors, the active leaf (door) shall be secured with the type lock required for single doors in subsection A of this section. The inactive leaf shall be equipped with throw bolts or flush bolts at top and bottom with a minimum throw of five-eighths inch. The throw bolt must contain hardened material.

C. All doors which require locking at top and bottom shall be secured with throw bolts at both top and bottom with a minimum throw of five-eighths inch. The throw bolt must contain hardened material.

D. Cylinder shall be so designed or protected with cylinder guards as previously defined in Section 15.08.050.

E. Exterior sliding commercial entrances shall be secured as in subsections A, B, and D of this section.

F. Rolling overhead doors, solid overhead doors, sliding or accordion garage-type doors shall be secured with a cylinder lock or padlock on the inside, when not otherwise controlled or locked by electrical power operation. If a padlock is used on the inside, when not otherwise controlled or locked, it shall be of hardened steel shackle, with minimum five pin tumbler operation with nonremovable key when in an unlocked position.

G. Metal accordion grate or grill-type doors shall be equipped with metal lock guide track at top and bottom, and a cylinder lock and/or padlock with hardened steel shackle and minimum five pin tumbler operation with nonremovable key in an unlocked position. The bottom track shall be so designed that the door cannot be lifted from the track when the door is in the locked position.

H. Outside hinges on all exterior doors shall be provided with nonremovable pins when using pin-type hinges, and/or the center hinge shall have a steel dowel projecting a minimum of three-quarter inch from one plate into the opposite plate of the hinge.

I. Doors with glass panels and doors with glass panels adjacent to the floor frame shall be secured as follows:
   1. Rated burglary-resistant glass or glasslike material; or
   2. The glass shall be covered with iron bars of at least one-half inch round or one inch by one-quarter inch flat steel material spaced not more than five inches apart, secured on the inside of the glazing; or
   3. Iron or steel grills of at least one-eighth inch material of two-inch mesh secured on the inside of the glazing.

J. In-swinging doors shall have rabbeted jambs.

K. Wood doors, not of solid core construction, or with panels therein with less than one and three-eighths-inch thickness, shall be covered on the inside with at least sixteen-gauge sheet steel or its equivalent attached with screws on minimum six-inch centers.

L. Jambs for all doors shall be constructed or protected so as to prevent violation of the function of the strike.

M. All doors frames shall be of steel or wood and be so reinforced as to prevent spreading strike plates. On all wood frame doorways, the strike plate shall be of hardened steel construction, a minimum of four inches in length of which shall be sufficient to extend one inch into the stud directly adjacent to the door frame.

N. All exterior doors excluding front doors shall have minimum of a one-hundred-watt bulb over the outside of the door. Such bulb shall be protected with a plycarbonate cover or cover of equal breaking-resistant material, and shall be illuminated during the period from sunset to sunrise.

(Ord. 1978-M-48 § II Art. 13.)

15.08.170 Commercial building - Accessible windows.

A. Accessible windows shall be of rated burglar-resistant glazing material.

B. If the window is of the type to be opened, it shall be secured with a locking mechanism capable of withstanding a force of three hundred pounds applied in any direction.

C. Louvered windows, except those above the first story, shall not be permitted.

D. Outside hinges on all accessible windows shall be provided with nonremovable pins and/or steel dowels projecting one-half inch from one plate into the opposite plate of the hinge.

(Ord. 1978-M-48 § II Art. 14.)

15.08.180 Commercial building - ventilating openings.

Ventilating openings, larger than ninety-six square inches and utilized for the intake or exhausting of air, shall have a cover securely fastened to the roof or wall so as to prevent easy removal from the exterior by a person using common tools. (Ord. 1978-M-48 § II Art. 15.)

15.08.190 Commercial building - roof openings.

A. All glass skylights on the roof shall be secured as follows:

Skylight units, or portions of openings utilizing transparent panels, shall be provided with burglar-resistant glazing material, meeting or surpassing Underwriters' Laboratory test 972. The skylight unit shall be securely fastened to the roof in such a manner as to prevent removal from the exterior by a person using common tools.

B. All hatchway openings on the roof shall be secured as follows:
   1. If the hatchway is of wooden material, it shall be covered on the inside with at least sixteen-gauge sheet steel or its equivalent, attached with screws on minimum six-inch centers or at

least seventeen-gauge sheet steel or its equivalent, attached tot he outside by rounded head flush bolts or vandal-proof screws.

2. The hatchway shall be secured from the inside with a slide bar or slide bolts. The use of a crossbar or padlock must be approved by the fire chief.
3. Outside hinges on all hatchway openings shall be provided with non-removable pins when using pin-type hinges, and/or a steel dowel projecting a minimum of one-half inch from one plate into the opposite plate of the hinge.

C. All air duct or air vent openings exceeding eight inches by twelve inches on the roof or exterior walls should be secured as follows:

1. Iron bars of at least one-half inch round or one inch by one-quarter inch flat steel material spaced no more than five inches apart and securely fastened; or
2. A steel grill of at least one-eights inch material or two-inch mesh and securely fastened.
3. If the barrier is on the outside, it shall be secured with rounded head flush bolts on the outside.

(Ord. 1978-M-48 § II Art. 16.)

15.08.200 Commercial building - entrance doors to individual offices of multiple-occupancy building.

Each entrance door to individual offices shall be considered to be an exterior door and be protected as required in subsections A through M of Section 15.08.160. (Ord. 1978-M-48 § II Art. 17.)

15.08.210 Commercial building - safes.

Commercial establishments having one thousand dollars or more in cash on the premises after closing hours shall lock such money in a safe after closing hours. The safe must have a minimum Underwriters' Laboratory TRTL 30, or S.M.N.A. group U-4 rating. (Ord. 1978-M-48 § II Art. 18.)

15.08.220 Commercial building - intrusion detection devices.

A. If it is determined by the enforcing authority of this chapter that the security measures and locking devices described in this chapter do not adequately secure the building, he/she may require the installation and maintenance of an intrusion detection device (burglar alarm system).

B. Extent of premises protection.

1. Individual alarm systems on mercantile premises, stockrooms are classified as installation Nos. 1, 2 or 3. Installation No. 1 does not apply to local alarms. (Established in compliance with Underwriters' Laboratory requirements);
2. Installation No. 1. Completely protecting all windows, doors, transoms, skylights and other openings leading from the premises, and all ceilings, floors, halls, party partitions are building walls which are exposed to street or public highway and except that part of any building wall which is at least two stories above the roof of an adjoining building or grade level, whichever is less;
3. Installation No. 2. Completely protecting all accessible windows, doors, transoms, skylights, and other openings leading from the premises; with contacts only, all inaccessible windows; and also protecting all ceiling and floors not constructed of concrete and all hall, party and partition walls, enclosing the premises, or:

a. Protecting with contacts only all movable openings leading from the premises, and providing a system of invisible radiation to all sections of the enclosed area so as to detect four-step movement,

b. Protecting with contacts only all movable openings leading from the premises, and providing a sound detection system in all sections of the enclosed area,

c. Completely protecting all accessible windows, doors, transoms, skylights, and other openings leading from the premises; with contacts only, all inaccessible windows; and providing a network of invisible beams to subdivide the floor space of each floor or separate section of the protected area into three approximately equal areas, and more where necessary to

provide at least one subdivision per one thousand square feet of floor space. When merchandise is concentrated in wall cases, the beam arrangement shall provide for spanning the entire front of the wall cases in addition to accomplishing the required subdivision. The requirement for subdivision shall not apply to washrooms, lavatories, clothes closets, dressing and alteration rooms, furnace and coal room, basements and other portions of the premises where valuables are not stored;

4. Installation No. 3. Completely protecting all accessible windows, doors, transoms, skylights, and other openings leading from the premises, or:
   a. Protecting with contact only, all movable accessible openings leading from the premises and providing one or more invisible rays or channels of radiation, with the minimum overall length of the rays or radiation equivalent to the longest dimensions of the area or areas to detect movement through the channel,
   b. Protecting with contacts only, all doors leading from the premises and providing a system of invisible radiation to all sections of the enclosed area, so as to detect four-step movement,
   c. Protecting with contacts only, all movable openings leading from the premises, and providing a sound detection system around the perimeter of the area, with additional microphones located near fixed and movable floor and ceiling openings,
   d. Any area irregular in shape, other than a simple rectangle or approximation thereof, shall, for the purposes of applying this rule, be divided into two or more sections approximating rectangles as closely as possible and covering the entire area to be protected. The minimum overall length of rays or channels of invisible radiation shall be taken as the sum of the longest dimensions of all such sections.

C. Establishments having specific-type inventories shall be protected by the following minimum-type alarm service:
   1. Alarm with a direct line to the police station or central station, Installation No. 2:
      a. Jewelry store (mfg. wholesale and retail),
      b. Gun shop,
      c. Wholesale liquor,
      d. Wholesale drugs,
      e. Wholesale tobacco,
      f. Banking establishments and currency exchanges;
   2. Alarm with a direct line to the police or to a central station, Installation No. 3:
      a. Liquor store,
      b. Electronic equipment,
      c. Clothing (new),
      d. Coins and stamps,
      e. Industrial tool supply house,
      f. Camera stores,
      g. Precious metal storage facility;
   3. Local alarm, Installation No. 3:
      a. Antique dealers,
      b. Art galleries,
      c. Service stations.

D. Dial alarm receiving equipment.
   1. No automatic protection device that automatically or electronically selects a telephone line connected to a central alarm station or police headquarters and reproduces a prerecorded voice message to report a criminal act or other emergency requiring police response, commonly known as "dial-alarms" or "dialers" shall be installed by any person on premises of any kind in the city.

2. Digital type nonvoice dialers will be allowed on residential installation only and provided the receiving station is a commercial central station.

E. Residential alarm system, while not requiring certification, do require all components be Underwriters' Laboratory listed for residential installation.

(Ord. 1978-M-48 § II Art. 19.)

15.08.230 Private dwelling - exterior doors.

A. Exterior doors and doors leading from garage areas into private dwellings shall be of solid core no less than one and three-fourths-inch thickness.

B. Exterior doors and doors leading from garage areas into private family dwellings shall be equipped with a dead lock with a minimum one-inch throw and dead locking latch. Dead bolts shall contain hardened inserts, or equivalent, so as to repel cutting tool attack. Mortise-type locks may be used if the above described requirements are met.

C. Vision panels in exterior doors or within forty inches of the inside activating device must be of rated burglar-resistant glazing material.

D. Exterior doors swinging out shall have non-removable hinge pins and/or steel dowels projecting a minimum of one-half inch from one plate into the opposite plate of the hinge.

E. In-swinging doors shall have rabbeted jambs.

F. Jambs for all doors shall be so constructed or protected so as to prevent violation of the function of the strike.

G. Cylinder guards shall be installed on all mortise locks whenever the cylinder locks project beyond the face of the door or is otherwise accessible to gripping tools.

(Ord. 1978-M-48 § III Art. 20.)

15.08.240 Private dwelling - Sliding glass doors.

A. Sliding glass doors shall meet or exceed the Architectural Aluminum Manufacturers Association standards as set forth in their bulletin, AAMA 1303.3-1971.

B. All single sliding doors shall have the movable section of the doors sliding on the inside of the fixed portion of the door.

C. Dead locks shall be provided on all single sliding patio doors. The lock shall be operable from the outside by a key utilizing a bored lock cylinder of pin tumbler construction. Mounting screws for the lock case shall be inaccessible from the outside. Lock bolts shall be of hardened steel or have hardened steel inserts and shall be capable of withstanding a force of eight hundred pounds applied in any direction. The lock bolt shall engage the strike sufficiently to prevent its being disengaged by any possible movement of the door with the space or clearances provided for installation and operation. The strike area shall be reinforced to maintain effectiveness of bolt strength.

D. Double sliding doors must be locked at the meeting rail and meeting the locking requirements of subsection C of this section.

(Ord. 1978-M-48 § III Art. 21.)

15.08.250 Private dwelling - window protection.

A. A window shall be so constructed that when the window is locked, it cannot be lifted from the frame.

B. Window locking devices shall be capable of withstanding force of three hundred pounds applied in any direction.

C. Sliding glass windows shall meet or exceed the Architectural Aluminum Manufacturers Association standards as set forth in their bulletin, AAMA 1302.3-1971.

D. Louvered windows, except those above the first story, shall not be permitted.

(Ord. 1978-M-48 § III Art. 22.)

15.08.260 Multiple dwelling - exterior doors.

Exterior doors and door leading from garage areas into multiple-dwelling buildings and doors leading onto stairwells, except in hotels and motels, shall be equipped with self-closing devices, allowing egress to the exterior of the building or into the garage area, or stairwell, but requiring a key to be used to gain access to the interior of the building from the outside or garage area or stairwell. (Ord. 1978-M-48 § IV Art. 23.)

15.08.270 Multiple dwelling - garage doors.

Whenever parking facilities are provided, either under or within the confines of the perimeter walls of any multiple dwelling, such facilities shall be fully enclosed and provided with a locking device. (Ord. 1978-M-48 § IV Art. 24.)

15.08.280 Multiple dwelling - entrance doors to individual units.

A. In hotels, motels and multiple-family dwellings, locks on entrance doors to individual units shall have dead bolts with one-inch throw and hardened steel inserts in addition to dead latches with one-half inch minimum throw. The locks shall be so constructed that both dead bolts and dead-latches can be retracted by a single action of the inside knob. Alternate devices to equally resist illegal entry may be used if approved by the enforcing authority.

B. All doors shall be of solid core with minimum thickness of one and three-quarters inch.

C. Vision panels in individual entrance doors or within forty inches of the inside activating device shall be of rated burglar-resistant glazing material.

D. An interviewer or doorscope shall be provided in each individual unit entrance door which does not contain a vision panel.

E. Doors swinging out shall have nonremovable hinge pins, and/or steel dowels projecting a minimum of one-half inch from one hinge plate into the opposite hinge plate.

F. In-swinging doors shall have rabbeted jambs.

G. Jambs for all doors shall be so constructed or protected as to prevent violation of the function of the strike.

H. Cylinder guards shall be installed on all mortise-type or rim-type cylinder locks whenever the cylinder projects beyond the face of the door or is otherwise accessible to gripping tools.

I. Door frames shall be of steel or wood and be so reinforced as to prevent spreading.

(Ord. 1978-M-48 § IV Art. 25.)

15.08.290 Multiple dwelling - sliding glass doors.

A. Sliding glass doors shall meet or exceed the Architectural Aluminum Manufacturers Association standards as set forth in their bulletin, AAMA 1303.3-1971.

B. All single sliding patio doors shall have the moveable section of the door sliding on the inside of the fixed portion of the door.

C. Dead locks shall be installed on all single sliding patio doors. The lock shall be operable from the outside by a key utilizing a bored lock cylinder of pin tumbler construction. Mounting screws for the lock case shall be inaccessible from the outside. Lock bolts shall be of hardened steel material insert or bore and shall engage the strike sufficiently to prevent its being disengaged by any possible movement of the door with the space of clearances provided for installation and operation. The strike area shall be reinforced to maintain effectiveness of bolt strength.

D. Double sliding doors must be locked at the meeting rail and meet the locking requirements in subsection C of this section.

(Ord. 1978-M-48 § IV Art. 26.)

15.08.300 Multiple dwelling - window protection.

A. Windows shall be so constructed that when the window is locked, it cannot be lifted form the frame.

B. Window locking devices shall be capable of withstanding force of three hundred pounds applied in any direction.

C. Sliding glass windows shall meet or exceed the Architectural Aluminum Manufacturers Association Standards as set forth in their bulletin, AAMA 1302.3-1971.

(Ord. 1978-M-48 § IV Art. 27.)

15.08.310 Multiple dwelling - illumination.

All multiresidential buildings, with common entrances to more than one unit, shall be illuminated during the period from sunset to sunrise with at least the equivalent of a one-hundred-watt bulb. Such bulb shall be covered and protected by a polycarbonate cover of equal breaking resistant material. (Ord. 1978-M-48 § IV Art. 28.)

Chapter 15.12

BUILDING OPERATIONS

Sections:

15.12.010	Use of streets.
15.12.020	Night operations.
15.12.030	Sidewalks.
15.12.040	Safeguards.
15.12.050	Penalty for violation of Sections 15.12.010 through 15.12.040.
15.12.060	Public gatherings - Regulations generally.
15.12.070	Public gatherings - Notice - Permit issuance.
15.12.080	Public gatherings - Inspection of premises.
15.12.090	Public gatherings - Exits.
15.12.100	Public gatherings - Seats.
15.12.110	Public gatherings - Doors.
15.12.120	Penalty for violation of Sections 15.12.060 through 15.12.110.
15.12.130	Public buildings - Responsibility for maintenance and safety.
15.12.140	Public buildings - Enforcement of provisions.
15.12.150	Public buildings - Fire fighting appliances.
15.12.160	Public buildings - Removal of apparatus.
15.12.170	Public buildings - Fire drills.
15.12.180	Public buildings - Doors.
15.12.190	Public buildings - Exit lights.
15.12.200	Penalty for violation of Sections 15.12.130 through 15.12.190.

15.12.010 Use of streets.

The use of streets for storage of materials in the process of construction or alteration of a building may be granted where the same will not unduly interfere with traffic and will not reduce the usable width of the roadway to less than eighteen feet; provided, that no portion of the street other than that directly abutting on the premises on which work is being done shall be used except with the consent of the owner or occupant of the premises abutting on such portion. Any person seeking to make such use of the street shall file with the city clerk a bond with corporate sureties to be approved by the city council, to indemnify the city for any loss or damage which may be incurred by it by reason of such use and occupation. (Prior code § 13.401.)

15.12.020 Night operations.

No construction or alteration operations shall be carried on at nighttime if the same are accompanied by loud noises. (Prior code § 13.402.)

15.12.030 Sidewalks.

No sidewalk shall be obstructed in the course of building construction without a special permit from the director of public works being first obtained. (Prior code § 13.403.)

15.12.040 Safeguards.

It shall be the duty of the person or corporation doing any construction or altering or wrecking work in the city to do the same with proper care for the safety of persons and property. Warnings, barricades and lights shall be maintained wherever necessary for the protection of pedestrians or traffic, and temporary roofs over sidewalks shall be constructed wherever there is danger to pedestrians from falling articles or materials. (Prior code § 13.404.)

15.12.050 Penalty for violation of Sections 15.12.010 through 15.12.040.

Any person, firm or corporation violating any provision of Sections 15.12.010 through 15.12.040 shall be fined not less than one dollar nor more than five hundred dollars for each offense, and a separate offense shall be deemed committed on each day during or on which a violation occurs or continues. (Prior code § 13.405.)

15.12.060 Public gatherings - Regulations generally.

It is unlawful to hold, manage, or conduct any meeting or entertainment of any kind in the city, in premises other than a building constructed in full compliance with the ordinance and laws pertaining thereto for auditorium, theater or lodge room purposes, excepting in compliance with the provisions of Sections 15.12.050 through 15.12.120. (Prior code § 27.601.)

15.12.070 Public gatherings - Notice - Permit issuance.

It shall be the duty of any person or persons conducting, calling for or managing any gathering in any premises other than a theater, lodge room or auditorium building constructed as provided in Section 15.12.060, to notify the city clerk of the date of such intended use at least ten days before such meeting is to take place. Upon such notice, the building commissioner shall inspect the premises to determine whether or not they comply with the provisions hereof. Any permit issued for any such gathering shall be subject to the condition that Sections 15.12.060 through 15.12.120 be fully complied with, whether or not such condition is embodied in the permit. (Prior code § 27.606.)

15.12.080 Public gatherings - Inspection of premises.

No such gathering or entertainment shall be held or presented in any premises other than a building as described in Sections 15.12.070, unless such premises have been examined by the building inspector not more than three days before the date of such gathering and found to be free from any fire hazard and found to be suitable for the purpose. No structure enclosed by a roof shall be used for such purpose unless the same is constructed of nonflammable materials; provided, that tents or structures covered by canvas or other materials may be so used if such canvas or other material has been properly treated so as to be rendered fire resistive. (Prior code § 27.602.)

15.12.090 Public gatherings - Exits.

Adequate unobstructed exits shall be provided in all premises used for such purposes to permit rapid egress of all persons attending, and there shall be at least two separate exits located at least thirty feet from each other. There shall be two lineal feet of doorway or exit space for each one hundred people accommodated. (Prior code § 27.603.)

15.12.100 Public gatherings - Seats.

A. Any stand or rows of seats used in such premises shall be so constructed as to be safe for the use designated, and shall be sufficiently strong to carry the same weight and stress as is required for the construction of the auditorium floors of theater buildings, not less than one hundred pounds per square foot.

B. It is unlawful to admit to any such premises a number of persons to exceed the number of actual seats maintained for their accommodation.

(Prior code § 27.604.)

15.12.110 Public gatherings - Doors.

All doors or gates or exits from premises used for such purpose shall open outward and no such exit shall be so constructed or locked that egress from inside the premises is blocked. (Prior code § 27.604.)

15.12.120 Penalty for violation of Sections 15.12.060 through 15.12.110.

Any person, firm or corporation violating any provision of Sections 15.12.060 through 15.12.110 shall be fined not less than twenty-five dollars nor more than five hundred dollars for each offense, and a separate offense shall be deemed committed on each day during or on which a violation occurs or continues. (Prior code § 27.607.)

15.12.130 Public buildings - Responsibility for maintenance and safety.

The owner, agent, occupant or person charged with the custody of any public building, auditorium, hotel, theater, lodge hall, or church, and in the case of schools, the president of the board of education, or the person in charge thereof and owning the same, shall be held liable for the equipment and maintenance of such apparatus as is required in Sections 15.12.140 through 15.12.200 for the maintenance and safety of all exits, stairs, doors, windows, or passageways. (Prior code § 27.501.)

15.12.140 Public buildings - Enforcement of provisions.

It shall be the duty of the fire chief to inspect all apparatus to be installed, and their location, and to make or cause to be made periodic inspections concerning the operation and accessibility of regular and emergency exits in such public places. (Prior code § 27.502.)

15.12.150 Public buildings - Fire fighting appliances.

Unless and until an approved sprinkler system is installed, the following appliances shall be required: the location and number of fire appliances shall be as follows, unless other location shall be more accessible and convenient for protection against fires:

A. Theaters.
   1. Stage, two one-quare chemical hand extinguishers, one on each side of the stage; one two and one-half gallon chemical hand extinguisher, readily accessible; one five-gallon hand pump, one fire axe,
   2. Foyer, two one-quare hand extinguishers at each end,
   3. Manager's office, one two-gallon chemical hand extinguisher or five-gallon hand pump;

B. Public Buildings, Auditoriums, Lodge Halls, and Hotels.
   1. Five-gallon hand pump and fire axe at or near the main entrance on the ground floor,
   2. Five-gallon hand pump at or near the foot of all basement stairways,
   3. Two pails in boilerroom unless oil burner, then two and one-half gallon special chemical hand extinguishers just outside boilerroom doors.
   4. One-quart chemical hand extinguisher on the stage, and
   5. One-quart chemical hand extinguisher in the lobby;

C. Churches.
   1. One five-gallon hand pump and fire axe at or near main entrance on ground floor,
   2. One five-gallon hand pump and fire axe in boilerroom;

D. Schools.
   1. One five-gallon hand pump and fire axe at or near the main entrance on ground floor,
   2. One five-gallon hand pump and fire axe in boilerroom.

(Prior code § 27.503.)

15.12.160 Public buildings - removal of apparatus.

It is unlawful to remove from its proper place andy fire apparatus or appliances except for inspection or in case of emergency. (Prior code § 27.505.)

15.12.170 Public buildings - fire drills.

It shall be the duty of the principal or other person in charge of pupils in every school in the city to establish and maintain a good and efficient fire drill which shall be practiced at least once a month during the

time the building is used for school purposes. A written report shall be made by the principal or person in charge of such building on each fire drill held, and of the time elapsed from the first fire signal until the last person was out.
(Prior code § 27.504.)

15.12.180 Public buildings - doors.

A. All public buildings which may be or are used for church, school, opera performances, theater, lecture room, hotel, public meeting or similar purposes, or which may be or are used for the collection of people for worship, amusement or instruction, and all buildings used for stores to which the public is invited, shall be so built that all doors which lead from the main hall or place of assembly shall open outward, and all means of egress for persons within such building shall be by means of egress for persons within such building shall be by means of doors which shall open outwards from the main hall and from the building.

B. All doors of schools and educational institutions shall remain unlocked during school hours.

(Prior code § 27.506.)

15.12.190 Public buildings - exit lights.

In all theaters and public meeting halls, a red light illuminating the word **"EXIT"** shall be kept burning over each regular and emergency exit while the theater or hall is occupied by an audience or by patrons.
(Prior code § 27.507.)

15.12.200 Penalty for violation of Section 15.12.130 through 15.12.190.

Any person, firm or corporation violating any provisions of Sections 15.12.130 through 15.12.190 shall be fined not less than five dollars nor more than five hundred dollars for each offense, and a separate offense shall be deemed committed on each day during or on which a violation occurs or continues. (Prior code § 27.508.)

Chapter 15.16

DANGEROUS BUILDINGS[2]

Sections:

15.16.010	Defined - declared nuisance.
15.16.020	Prohibition.
15.16.030	Abatement requirements.
15.16.040	Damaged buildings within fire limits - requirements for removal or rebuilding.
15.16.050	Violation - penalty.

15.16.010 Defined - declared nuisance.

A. The term 'dangerous building' as used in this chapter is defined to mean and include:

1. Any building, shed, fence, or other manmade structure which is dangerous to the public health because of its construction or condition, or which may cause or aid in the spread of disease or cause injury to the health of the occupants of it or of neighboring structures;
2. Any building, shed, fence, or other manmade structure which, because of faulty construction, age, lack of proper repair or any other cause, is especially liable to fire, and constitutes or creates a fire hazard;
3. Any building, shed, fence, or other manmade structure which, by reason of faulty construction, age, lack or proper repair or any other cause, is liable to cause injury or damage by collapsing or by a collapse or fall of any part of such structure;
4. Any building, shed, fence or other manmade structure which, because of its condition or because of lack of doors or windows, is available to and frequented by malefactors or disorderly person who are not lawful occupants of such structure.

B. Any dangerous building in the city is declared to be a nuisance.

(Prior code § 13.301.)

15.16.020 Prohibition.

It is unlawful to maintain or permit the existence of any dangerous building in the city, and it is unlawful for the owner, occupant, or person in custody of any dangerous building to permit the same to remain in a dangerous condition, or to occupy such building or permit it to be occupied while it is or remains in a dangerous condition. (Prior code § 13.302.)

15.16.030 Abatement requirements.

A. Whenever the building inspector, the fire chief, any member of the board of health, the city sanitarian, or any other officer of the city, finds that any building or structure in the city is a dangerous building, he shall file a written statement to this effect with the city sanitarian. The sanitarian shall thereupon cause written notice to be served upon the owner thereof, and upon the occupancy thereof, if any, by registered mail or by personal service. Such notice shall state that the building has been declared to be in dangerous condition and that such dangerous condition must be removed or remedied by repairing or altering the building or demolishing it, and that the condition must be remedied at once. Such notice may be in the following form:

"To _____(owner-occupant of the premises) of the premises known and described as _____ "You are hereby notified that (describe building) on the premises above described has been condemned as a nuisance and a dangerous building after inspection by _____

"The causes for this decision are (here insert the facts as to the dangerous condition).

"You must remedy this condition or demolish the building immediately, or the City of St. Charles will proceed to do so."

B. If the person receiving such notice has not complied therewith within ten days from the time when this notice is served upon such person by personal service or by registered mail, the city may, upon orders of the mayor, proceed to remedy the condition or demolish the dangerous building.

(Prior code § 13.303.)

15.16.040 Damaged buildings within fire limits - requirements for removal or rebuilding.

A. Any building or structure within the fire limits of the city as herein prescribed by ordinance which has or may be damaged by fire, decay, or other cause to the extent of fifty percent of its value, shall be torn down and removed, or rebuilt with nonflammable walls.

B. Upon written notice by the building inspector, city sanitarian, fire chief, or any other city officer, filed with the city sanitarian, the sanitarian shall notify the mayor of the receipt of such notice. The mayor shall then appoint three persons to determine whether or not such building or structure has been damaged to the extent of fifty percent of its value. A copy of the notice filed by the city officer, together with a notice of the appointment of this board of three persons to determine the damage, shall be served upon the owner of the premises by personal service or by registered mail to his last known address. Such notice may be in substantially the following form:

"To_____

"You are hereby notified that _____ has determined that the building owned by you at _____, located within the fire limits of the City of St. Charles has been damaged by fire, decay, or otherwise to the extent of fifty percent (50%) of its value; and that a board of three (3) members has been appointed to verify this finding, which board will hold its first meeting in the city hall on the _____ day of _____ at the hour of ____ o'clock, at which time it will determine whether this finding is correct.

"If this finding is verified by the board, you must tear down and remove the said building, or rebuild it with non-flammable walls."

C. If this finding is verified by the board of three members and it determines that the building in question has been damaged to the extent of fifty percent of its value, it shall be the duty of the owner to tear down and remove the said building within twenty days after the finding of such board, or to remodel it to comply with the requirements of new buildings in the fire limits, and it is unlawful to occupy or permit occupancy of such building after such finding until it is so remodeled.

(Prior code § 13.304.)

15.16.050 Violation - Penalty.

Any person, firm or corporation violating any provision of this chapter, or permitting any dangerous building, or any building or structure to remain in a dangerous condition, or to remain in the fire limits without remodeling as provided for in Section 15.16.040 after it has been damaged to the extent of fifty percent of its value, shall be fined not less than one dollar nor more than five hundred dollars for each offense, and a separate offense shall be deemed committed on each day during or on which a violation occurs or continues. (Prior code § 13.305.)

Chapter 15.20

MOVING BUILDINGS

Sections:

15.20.010	Permit - Required - Application.
15.20.020	Fees.
15.20.030	Bond.
15.20.040	Lights and warnings.
15.20.050	Interference with public utility wires.
15.20.060	Interference with fire alarm wires.
15.20.070	Violation - Penalty.

15.20.010 Permit - Required - Application.

No person, firm or corporation shall move any building on, through, or over any street, alley, sidewalk or other public place in the city without having first obtained a permit from the Building Commissioner. Applications for such permits shall be made in writing at the office of the Building Commissioner and shall state thereon the proposed route and the number of days it is intended that the building should occupy any portion of any street, alley, sidewalk or other public place. (Ord. 1986-M-63 § 3: Prior code § 13.501.)

15.20.020 Fees.

Upon the approval of the intended route by the Building Commissioner, a fee of ten dollars for each day or fraction thereof that it is intended that the building shall occupy any portion of any such public place shall be paid to the city clerk and the permit issued. An additional payment of ten dollars for each day or fraction thereof over and above the time stated on the permit, during which any building shall occupy any such public place, shall be paid. (Ord. 1986-M-63 § 3: Prior code § 13.502.)

15.20.030 Bond.

Every person, firm or corporation applying for a permit under this chapter shall submit with his application a bond in the sum of fifty thousand dollars conditioned on his compliance with all the provisions of this chapter, and agreeing to pay, and holding the city harmless from any claim which may be made against it by reason of the occupation of any street, sidewalk, alley or other public place by the building or structure moved. (Prior code § 13.503.)

15.20.040 Lights and warnings.

Whenever a street or alley is blocked by a house or structure which is being moved, warnings to that effect shall be placed by the public engineer so as to warn vehicles and persons from entering that portion of the street which is so blocked. The person, firm or corporation moving any building through the streets shall keep warning signs and lanterns or lights at night on the building so as to guard against any person or vehicles from colliding with it. (Prior code § 13.504.)

15.20.050 Interference with public utility wires.

Whenever it is necessary to interfere with wires or cables of a public utility in moving a building, the terms of any special or franchise ordinance governing shall apply and the bond therein specified shall be given. If no such terms apply then the city council shall estimate the expense of fixing the wires and the bond to be given to cover this. (Prior code § 13.505.)

15.20.060 Interference with fire alarm wires.

When any such moving building approaches any fire alarm wire or pole which would be endangered by the removal of such building, it shall be the duty of the mover to notify the chief of the fire department at least six hours before reaching such wire or pole so that they may be removed or cared for by the city. (Prior code § 13.506.)

15.20.070 Violation - Penalty.

Any person, firm or corporation violating any provision of this chapter shall be fined not less than one dollar nor more than five hundred dollars for each offense, and a separate offense shall be deemed committed on each day during or on which a violation occurs or continues. (Prior code § 13.507.)

Chapter 15.24

FIRE LIMITS[3]

Sections:

15.24.010 Established.
15.24.020 Violation - Penalty.

15.24.010 Established.

A. Fire limits are established in accordance with Section 15.04.010.

B. All areas annexed to the city shall comply with Section 15.04.010 except buildings in Use Groups R-2 and R-3.

C. All areas rezoned shall comply with Section 15.04.010 except buildings in Use Group R-2 and R-3.

(Ord. 1985-M-33 § 2; Ord. 1978-M-22; Ord. 1969-M-9: Prior code § 13.201.)

15.24.020 Violation - Penalty.

Any person, firm or corporation violating any provision of this chapter shall be fined not less than one dollar nor more than five hundred dollars for each offense, and a separate offense shall be deemed committed on each day during or on which a violation occurs or continues. (Prior code § 13.204.)

Chapter 15.28

FIRE PREVENTION CODE[4]

Sections:

15.28.010	Fire Prevention Code, Life Safety Code – Adopted – Modifications.
15.28.020	Bureau of Fire Prevention – Establishment & Duties.
15.28.030	Definitions.
15.28.040	Limits for the storage, handling, processing, manufacturing and transportation of flammable, hazardous or toxic chemicals, liquids and gases.
15.28.050	Amendments to the ICC International Fire Code 2009.
15.28.060	Emergency Conditions.
15.28.070	Appeals.
15.28.080	New materials, processes or occupancies requiring permits.
15.28.090	Violation – Penalty.
15.28.100	Fire Alarm Systems.
15.28.110	Renumbered to 15.28.080.
15.28.120	Renumbered to 15.28.090.
15.28.130	Section 6.2(a) amended - permit for storage of cellulose nitrate plastics. (REMOVED)
15.28.140	Section 7.6 added - permit for storage combustible fibers. (REMOVED)
15.28.150	Section 0.2(a) amended - permit for dry-cleaning business. (REMOVED)
15.28.160	Section 9.8 added - automatic extinguishing systems. (REMOVED)
15.28.170	Section 11.2 amended - marking of exitways. (REMOVED)
15.28.180	Section 11.3 amended - lighting of exitways. (REMOVED)
15.28.190	Section 11.6 added - number and location of exits. (REMOVED)
15.28.200	Section 13.4 amended - bond and responsibility for fireworks display required. (REMOVED)
15.28.210	Section 14.6 added - fire alarm systems. (REMOVED)
15.28.220	Subsection (f) added to Section 16.27 - Testing of tanks and pipes. (REMOVED)
15.28.230	Subsection (b) added to Section 16.37 - testing of tanks and pipes. (REMOVED)
15.28.240	Subsection (c) added to Section 16.41 - permit for aggregate capacity in excess of five gallons. (REMOVED)
15.28.250	Section 16.99 amended - tank vehicles. (REMOVED)
15.28.260	Section 20.3(a) amended - permit for storage of hazardous chemicals. (REMOVED)
15.28 270	Section 21.3(a) amended - permits and reports of installations. (REMOVED)
15.28.280	Section 22.10(a) amended - liquefied petroleum gas tank vehicles. (REMOVED)
15.28.290	Section 22.6 added - location of lumberyards and woodworking plants. (REMOVED)
15.28.300	Section 23.3 amended - permit for storage of magnesium. (REMOVED)
15.28.310	Subsection (e) and (f) added to Section 28.3 - smoking prohibited under certain conditions. (REMOVED)
15.28.320	Section 28.16 amended - fire department access. (REMOVED)
15.28.330	Section 28.17 added - water supplies for fire department use. (REMOVED)
15.28.340	Section 28.18 added - fire extinguishers. (REMOVED)
15.28.350	Section 28.19 added - identification of fire hazard of materials. (REMOVED)

15.28.010 Fire Prevention Code, Life Safety Code - adopted - modifications.

The provisions of a) the ICC International Fire Prevention Code, 2009 edition with the following Appendices:

- Appendix B – Fire Flow Requirements for Buildings
- Appendix C – Fire Hydrant Locations and Distribution
- Appendix D – Fire Apparatus Access Roads
- Appendix J – Emergency Responder Radio Coverage

as published by the International Code Council, Inc., 4051 West Flossmoor Road, Country Club Hills, IL 60478-5795, and b) the NFPA 101 Life Safety Code, 2009 edition, published by the National Fire Protection Association, 1 Batterymarch Park, Quincy, Massachusetts 02169-7471, are hereby adopted by reference as if fully set forth herein, together with the amendments listed herein, for the purpose of prescribing regulations governing conditions hazardous to life and property from fire or explosion. These codes and amendments thereto shall be known as the "City of St. Charles Fire Prevention Code."
(Ord. 2010-M-44 § 1; Ord. 2004-M-76 § 1; Ord. 1988-M-15 § 1; Ord. 1978-M-37 Art. 1.)

15.28.020 Bureau of Fire Prevention – Establishment & Duties.

A. The Fire Prevention Code shall be enforced by the Bureau of Fire Prevention in the Fire Department of the City, which is established and which shall operate under the supervision of the Chief of the Fire Department.
B. The person in charge of the Bureau of Fire Prevention shall be designated by and serve at the pleasure of the Chief of the St. Charles Fire Department.
C. The Chief of the Fire Department may detail such members of the Fire Department as inspectors as shall from time to time be necessary.
D. The Chief of the Fire Department shall recommend any amendments to the Code, which, in his judgment, shall be desirable.

(Ord. 2010-M-44 § 1; Ord. 2004-M-76 § 1; Ord. 1978-M-37 Art. 2.)

15.28.030 Definitions.

A. Wherever the words "Fire Prevention Code" or "Code" are used, they shall be held to mean the City of St. Charles, Illinois, Fire Prevention Code.
B. Wherever the word "Municipality" is used in the Fire Prevention Code, it shall be held to mean the City of St. Charles, Illinois.
C. Wherever the term "Corporation Counsel" is used in the Fire Prevention Code, it shall be held to mean the City Attorney for the City of St. Charles, Illinois.
D. Wherever the term "Fire Officials," "Fire Inspector," "Inspector," "Code Official," "Authority Having Jurisdiction," or "Fire Marshal" is used, it shall be held to mean the Chief of the St. Charles Fire Department or his designee.
E. Wherever the term "Bureau of Fire Prevention" is used, it shall be held to mean the Bureau of Fire Prevention of the City of St. Charles Fire Department, St. Charles, Illinois.

(Ord. 2010-M-44 § 1; Ord. 2004-M-76 § 1; Ord. 1988-M-15 § 1; Ord. 1978-M-37 Art. 3.)

15.28.040 Limits for the storage, handling, processing, manufacturing and transportation of flammable, hazardous or toxic chemicals, liquids and gases.

A. **Prohibited Storage of Explosives and Blasting Agents.** The storage, handling and use of explosives and blasting agents are hereby prohibited.
B. **Prohibited Storage of Flammable and Combustible Liquids.** The storage of flammable and combustible liquids in outside, above-ground tanks is hereby restricted as follows: As approved by the Fire Prevention Code by the City of St. Charles, Illinois 60174. See F-2206.2.3.
C. **Prohibited Storage and Manufacturing of Fireworks.** The manufacture, sale, handling, use or storage of fireworks is prohibited within the corporate limit of the City of St. Charles. See F-3301 (pg. 299), Explosives & Fireworks.
D. **Restricted Bulk Storage of Liquefied Petroleum Gases.** The bulk storage of liquefied petroleum gases in excess of 500 gallons of water capacity is hereby prohibited.
E. **Motor Vehicle Routes for Transporting Hazardous Chemicals and Other Dangerous Articles Including Liquefied Petroleum Gases and Combustible and Flammable Liquids.**

Routes for vehicles transporting hazardous chemicals and other dangerous articles including combustible and flammable liquids are hereby established as follows:

1. Routes approved by the state or federal governments.
2. No tank vehicles shall be parked for over one hour or left unattended at any time.

(Ord. 2010-M-44 § 1; Ord. 2004-M-76 § 1; Ord. 1988-M-15 § 1; Ord. 1978-M-37 Art. 4.)

15.28.050 Amendments to the ICC International Fire Code 2009.

1. Section 101.1 insert the name of jurisdiction: "City of St. Charles, Kane and DuPage Counties, Illinois."

2. Amend Section 307.4.3, "Portable outdoor fireplaces." Delete the exception.

3. Amend Section 308, "Open Flames" as follows:
   Amend 308.1.6.2 "Portable fueled open-flame devices." Delete exception #4.
   Amend 308.3 "Group A occupancies." Delete exceptions #1.2, 1.3, 2, & 3.

4. Add Section 318 "Miscellaneous Provisions" to read as follows:
   318 Miscellaneous Provisions
   318.1 Tenant Separation. Each tenant space shall be separated from other tenant spaces and corridors by walls, partitions, and floor-ceiling assemblies having at least a one (1) hour approved fire resistance rating.

5. Add Section 506.3 "Location" to read as follows:
   506.3 Location. The installation of the approved key box shall be approved by the Fire Chief. The box shall be located not more than six (6) feet above grade. The key box may be supervised by a tamper switch.

6. Delete the provisions of Sections 507.1 and 507.5.1, including the exceptions to 507.5.1 and substitute the following therefore:
   507.1 Required Water Supply. An approved public water supply capable of supplying the required fire flow for fire protection shall be provided to premises upon which facilities, buildings, or portions of buildings are hereafter constructed or moved into within the jurisdiction. The approved water supply system shall be capable of meeting the following minimum criteria.
   a. The system shall be under pressure with an average static pressure of not less than 35 pounds per square inch (PSI).
   b. Flows shall be calculated at 20 PSI residual pressure.
   c. Water supplies shall be available for a continuous four hour duration.

   507.5.1 Where required. Where a portion of the facility or building hereafter constructed or moved into or within the jurisdiction is more than 300 feet from a hydrant on a fire apparatus access road, as measured by an approved route around the exterior of the facility or building, on-site fire hydrants and mains shall be provided where required by the Fire Marshal.

   507.5.1.1 Hydrants shall be located approximately ten (10) feet from an all-weather roadway. If this cannot be done, the closest part of the hydrant shall be set back at least five (5) feet from the curb line.

   507.5.1.2 A fire hydrant shall be located within 75 feet of the fire department connection that it serves.

   507.5.1.3 Access to fire hydrants shall be all-weather roadways adequate in width, clearance and strength for fire fighting purposes. Such routes, including private roadways shall be maintained accessible during all seasons of the year. Legal provisions will be required for private roads.

507.5.1.4 Fire hydrants shall meet the requirements of the City of St. Charles and the standards of the American Water Works Association, and shall have two and one half (2 1/2) inch outlets and one (1) four and one half (4 1/2) inch outlet with auxiliary gate valves on the hydrant branch line. Threads shall be American National Standard. Pumper outlets shall face roadways.

7. Amend Section 605.1 "Abatement of Electrical Hazards" to read as follows:
   605.1 Abatement of Electrical Hazards. Identified electrical hazards shall be abated. Identified hazardous electrical conditions in permanent wiring shall be brought to the attention of the code official responsible for enforcement of the electrical code as adopted in Section 15.04.040 of the St. Charles Municipal Code. Electrical wiring, devices, appliances and other equipment that is modified or damaged and constitutes an electrical shock or fire hazard shall not be used.

8. Add Section 605.11 "Service Disconnects" to read as follows:
   605.11 Service Disconnects. Service disconnecting means shall be provided either outside the building or via a key operated remote control, located at the fire alarm control panel or other approved location, and shall have provisions to allow the service to be locked open. Each building/tenant space shall have a main disconnect incorporated within the main distribution panel inside the space.

9. Amend Section 901.7 "System out of service" to read as follows:
   901.7 System out of service. Where a required fire protection system is out of service, the fire department and the fire code official shall be notified immediately and, where required by the fire code official, the building shall either be evacuated or an approved fire watch shall be provided for all occupants left unprotected by the shut down until the fire protection system has been returned to service. Fire protection systems shall not be out of service for more than twenty-four (24) hours for maintenance or repairs. Where utilized, fire watches shall be provided with at least one approved means for notification of the fire department and their only duty shall be to perform constant patrols of the protected premises and keep watch for fires.

10. Add Section 901.10 "Inspection, Testing, and Maintenance" to read as follows:
    901.10 Inspection, Testing, and Maintenance. For purposes of supplementing the provisions of this article the City Council hereby adopts NFPA 25 Standard for the Inspection, Testing, and Maintenance of Water-Based Fire Protection Systems.

11. Delete the provisions in Section 903.2 "Automatic Sprinkler Systems – Where Required" inclusive of subsections 903.2.1 through 903.2.12 and Table 903.2.11.6 and substitute the following therefore:
    903.2 Where required. An approved automatic sprinkler system installed in accordance with the provisions of all applicable codes and standards shall be provided and maintained in full operating condition throughout every story and basement of all buildings subject to this code.

    Exceptions:
    1. Unoccupied structures of less than 400 square feet, considered low hazard and located not less than 100 feet from another structure. The requirements shall be subject to modifications by the authority having jurisdiction to compensate for particular building conditions to meet the intention of the code.
    2. Salt Dome Structures, Provided:
       a. The structure is constructed with approved noncombustible material.
       b. The structure is continually monitored by an approved automatic fire alarm system.
       c. The structure is located a minimum distance of one hundred (100) feet from any principle building, fueling facilities, and other high hazard occupancies or materials as defined in the adopted Building Code.
    3. Unenclosed Roof Structures:

a. The structure is constructed with approved noncombustible material.
b. The structure is located a minimum distance over one hundred (100) feet from any principle building.

12. Amend Section 903.6 "Existing Buildings" and add 903.6.3 "Change of use classification" to read as follows:

    903.6.3 Change of use classification. An automatic sprinkler system shall be provided throughout a building, when the use classification of the building or a space within the building changes. This requirement shall be subject to modifications by the authority having jurisdiction to compensate for particular building conditions.

13. Delete the provisions of Section 907.2 "Where required" and substitute the following therefore:

    907.2 Where required. An approved fire alarm system, installed in accordance with the provisions of this code and NFPA 72, 2007 edition, shall be provided in new buildings and structures in accordance with Sections 907.2.1 through 907.2.23 and provide occupant notification in accordance with 907.6, unless other requirements are provided by another section of this code. Notwithstanding any provisions of Section 907 and its subsections to the contrary, an approved manual fire alarm signaling system shall be installed and maintained in all buildings over one (1) story in height or over 1,000 square feet.

14. Delete all of the Exceptions to 907.2.3 "Group E," in their entirety.

15. Delete the provisions of Section 907.3 "Where required in existing buildings and structures" and substitute the following therefore:

    907.3 Where required in existing buildings and structures. An approved fire alarm system shall be installed in existing buildings and structures where required in chapter 46, or notwithstanding any provisions of Section 907 and its subsections to the contrary, an approved manual fire alarm signaling system shall be installed and maintained in all buildings over one (1) story in height or over 1,000 square feet.

16. Delete the provisions of Section 907.7.5 "Monitoring" and its exceptions and substitute the following therefore:

    907.7.5 Supervisory service. Where required by this chapter or by the International Fire Code, an approved supervising station in accordance with NFPA 72, 2007 edition, shall monitor fire alarm systems. All required fire protective signaling systems shall transmit alarm and trouble signals to an approved central station, proprietary system, or remote station system, and shall be approved by the Fire Department. The following methods are approved:
    1. Direct connect
    2. AES Radio or other approved 2-way radio frequency systems
    3. Or other methods approved by the Fire Official

    Exception: Supervisory service is not required for:
    1. Single and multiple-station smoke alarms required by Section 907.2.10
    2. Smoke detectors in Group I-3 Occupancies
    3. Automatic sprinkler systems in 1 and 2 family dwellings

17. Delete the provisions of Section 907.7.5.1 "Automatic telephone dialing devices."

18. Amend the provisions of Section 912.1 "Installation" and substitute the following therefore:

    912.1 Installation. The type (Siamese, Storz) and size of the fire department connection shall be in accordance with the NFPA standard applicable to the system design and shall be subject to approval of the Fire Department, based upon an analysis of the building's size and use group. Generally, a 5 inch size, Storz type connection is required.

19. Delete the "Exception" to 914.2.1 "Automatic sprinkler system."

20. Delete "Exceptions #1 & #2" to Section 914.3.1 "Automatic sprinkler system."

21. Delete “Exceptions #1 & #2” to Section 914.4.1 “Automatic sprinkler system.”

22. Delete “Exceptions #1 & #2” to Section 914.6.1 “Automatic sprinkler system.”

23. Add subparagraph “6” to Section 1006.3 “Illumination emergency power” to read as follows:
    6. In all rooms and spaces over 2,000 square feet in area with an occupancy load of 20 or more.

24. Amend the provisions of Section 1008.1.9.3 “Locks and Latches” by deleting “Conditions No. 2, 2.1, 2.2, and 2.3.

25. Amend Table 1018.1 to read as follows:

Table 1018.1
Corridor Fire Resistance Rating

Occupancy	Occupancy Load Served by Corridor	Required Fire Resistance Rating (hours)	
		Without Sprinkler System	With Sprinkler System (c)
H-1, H-2, H-3	All	Not Permitted	1
H-4, H-5	Greater than 30	Not Permitted	1
A, B, E, F, M, S, U	Greater than 30	Not Permitted	1
R	Greater than 10	Not Permitted	1
I-2 (a), I-4	All	Not Permitted	1
I-1, I-3	All	Not Permitted	1 (b)
(a) For requirements for occupancies in Group I-2, see Section 407.3. (b) For a reduction in the fire resistance rating of occupancies in Group I-3, see Section 408.7. (c) Buildings equipped throughout with an automatic sprinkler system in accordance with Section 903.3.1.1 or 903.3.1.2 where allowed.			

26. Amend Section 2206.2.2 “Above ground tanks located inside buildings” to read as follows:
    2206.2.2 Above ground tanks located inside buildings. Above ground tanks for the storage of Class I, II and IIIA liquid fuels are not allowed to be located in buildings.

27. Amend Section 2206.2.3 “Above ground tanks located outside” to read as follows:
    2206.2.3 Above ground tanks located outside, above grade. The storage of flammable or combustible liquids in outside above ground tanks is prohibited within the corporate limits of the City of St. Charles, Illinois, except by Special Permit issued by the Fire Chief. Compliance with the following criteria is required for the issuance of a Special Use Permit for such use:
    1. Above ground tanks used for outside, above grade storage of Class I liquids shall be listed and labeled as protected above ground tanks and be in accordance with Chapter 34. Such tanks shall be located in accordance with Table 2206.2.3.
    2. Above ground tanks used for above grade storage of Class II or IIIA liquids are allowed to be protected above ground tanks or, when approved by the Chief Fire Official, other above ground tanks that comply with Chapter 34. Tank locations shall be in accordance with Table 2206.2.3.
    3. Tanks containing fuels shall not exceed 500 gallons in individual capacity or 1000 gallons in aggregate capacity.

4. Tanks located at farms, construction projects, or rural areas shall comply with Section 3406.2.
5. Above ground tanks shall not be used for the outside storage of motor fuels at automotive service stations.
6. A site plan for the installation of the above ground tank shall be submitted to the Fire Official showing all buildings and structures on the same parcel.
7. At least two (2) fire hydrants shall be provided within 300 feet of the above ground tank.
   a. The minimum flow for each hydrant shall be 1,000 gallons each.
   b. The fire flow duration shall be 60 minutes for flows up to 1,000 gpm; 2 hours to 2,000 gpm, and 3 hours to 3,000 gpm.
8. The above ground tank shall be protected with physical barriers per Section 312.2.
9. Above ground storage tank(s) shall not be for use by the general public nor shall any liquid contained in an above ground tank be transferred into any type vessel or device to be used or controlled by the general public.
10. No liquid shall be stored in an above ground tank that has a flash point less than that of gasoline or -36 to -45 degrees F.
11. An automatic shutoff device capable of stopping the delivery of fuel into a storage tank at 90% of the tank capacity shall be provided.
12. Tank contents must be transferred by means of fixed pumps only. Pumps must be designed and equipped so as to prevent accidental discharge.
13. All tank openings associated with piping, vents, and inspections, shall be through the top of the tank only.
14. Approved anti-siphon devices shall be installed at each connection of the piping to the tank when such piping extends below the level of the top of the tank.
15. U.L. listed, portable ABC type fire extinguisher(s) shall be provided.
16. No parking is allowed within 50 feet of an above ground tank.
17. All above ground tank plans must include the following:
    a. Site plans as mentioned above.
    b. Above ground tank details including all piping systems, pump and transfer systems, manufacturer's tank specifications, and all site protection, safety equipment, and safety signage per NFPA 704.
    c. The above ground tank requires a City of St. Charles Building Permit, and four (4) sets of plans and specifications are required.
    d. Approval for all above ground tank installations shall be by the Fire Chief Marshal and the Building Official.

TABLE 2206.2.3
MINIMUM SEPARATION REQUIREMENTS FOR ABOVE GROUND TANKS

CLASS OF LIQUID AND TANK TYPE	INDIVIDUAL TANK CAPACITY (gallons)	MINIMUM DISTANCE FROM NEAREST IMPORTANT BUILDING ON SAME PROPERTY (feet)	MINIMUM DISTANCE FROM NEAREST FUEL DISPENSER (feet)	MINIMUM DISTANCE FROM LOT LINE WHICH IS OR CAN BE BUILT UPON, INCLUDING THE OPPOSITE SIDE OF A PUBLIC WAY (feet)	MINIMUM DISTANCE FROM NEAREST SIDE OF ANY PUBLIC WAY (side)	MINIMUM DISTANCE BETWEEN TANKS (feet)
Class I protected above ground tanks or tanks in vaults	500	50	25[a]	100	50	3
Class II and III protected above ground tanks or tanks in vaults	Same as Class I	Same as Class I	Same as Class I	Same as Class I	Same as Class I	Same as Class I
Other tanks	All	50	50	100	50	3

For SI: 1 foot = 304.8 mm, 1 gallon – 3.785 L.
a. At fleet vehicle motor fuel dispensing facilities, no minimum separation distance is required.

28. Amend Section 2703.1 "Scope" to read as follows:
    2703.1 Scope. The storage, use and handling of all hazardous materials shall be in accordance with this Section and Exhibit A.

29. Delete the provisions of Section 2703.2.4.2 "Above ground tanks" in its entirety, including the exception and Section 2703.2.4.2.1 (See Section 2206.2.3 for applicable regulations.)

30. Add Section 3301.2 "Permit required" to read as follows:
    3301.2 Permit required. Permits shall be required as set forth in Section 105.6 and regulated in accordance with this section. An application for permit, on a form developed by the Fire Official, shall be made in writing at least thirty (30) days in advance of the display of fireworks or discharge of explosives.

31. Amend Section 3405.1 "Scope" to read as follows:
    3405.1 Scope. Dispensing, use, mixing and handling of flammable liquids shall be in accordance with Section 3403 and this Section. Tank vehicle and tank car loading and unloading and other special operations shall be in accordance with Section 3406. Flammable or Combustible liquids shall not be dispensed by gravity from tanks, drums, barrels or similar containers. Approved pumps that take suction from the top of the container shall be used. Unattended dispensing operations by the general public shall be prohibited. No tank vehicle shall be left unattended on any lot, street, highway, avenue, alley, or any other location, public or private.
    Exception:
    1. Containers of organic coatings having no fire point and which are opened for pigmentation are not required to comply with this Section.

32. Add Section 3801.4 "Storage Prohibited/Permit Required" to read as follows:
    3801.4 Storage Prohibited/Permit Required. Above ground storage of liquefied petroleum gas utilizing one or more containers having a total capacity of over 1,000 gallons water capacity shall be prohibited.

33. Add Section 3801.5 "Parking Restrictions" to read as follows:
    3801.5 Parking Restrictions. No tank vehicle shall be left unattended on any lot, street, highway, avenue, alley or any other location, public or private.

34. Add "Exhibit A Performance Guidelines for High Hazard Uses in the City of St. Charles":

Exhibit A
Performance Guidelines for High Hazard Uses in the City of St. Charles

1. Specific location: The geographic location and distances to other structures, rivers, streams, and other use groups.
2. Zoning: The proximate distances to assembly, educational, institutional, and residential uses and vacant land zoned for these uses.
3. Types of hazardous materials which are not allowed: Materials listed in Section 307.3 High Hazard Group H-1 that present a detonation hazard shall not be permitted under any circumstances.
4. Allowable construction types: Type I and II only.
5. Required fire protection for High Hazard materials:
   a. Provide extra hazard Group II fire sprinkler system
   b. Provide a fixed foam fire protection system
6. Required water supply system: 3,000 to 6,000 gallons per minute from a reliable source.

(Ord. 2010-M-44 § 1; Ord. 2004-M-76 § 1; Ord. 1988-M-15 § 1; Ord. 1978-M-37 Art. 5 (part).)

15.28.060 Emergency Conditions.

In case there shall be, in the opinion of the Fire Official, actual and immediate danger to life and property from the hazards of fire and explosion arising from the storage, handling, or use of hazardous substances, materials, or devices, or from conditions hazardous to life and property in the use or occupancy of buildings or premises, the Fire Official shall employ such labor and machinery, equipment and devices and cause the necessary work to be done to render said occupants or property temporarily safe, whether the procedure prescribed in this section has been instituted or not.

A. Where practical and time constraints permit, the owner, occupant or other person responsible for the emergency conditions shall be notified of the emergency condition, in writing, and shall have the option of making the condition safe.
B. The owner and occupants of the premises shall be jointly and severally liable for any costs incurred in connection with the same.
C. The Fire Official of the city of St. Charles, Illinois, shall cause proper action to be instituted against the owner of the premises, and the occupants if different than the owners, for the recovery of costs incurred by the City of St. Charles, Illinois, in the performance of the emergency work.
D. For the purposes of this Article, the following words and phrases shall have the meanings respectively ascribed to them:
    a. "Hazardous Substance" or "Hazardous Material" means any substance or material or mixture of substances which is toxic, corrosive, an irritant, strong sensitizer, radioactive, flammable, combustible, or which generates pressure through decomposition, heat or other means and which may cause injury, or illness to humans, domestic livestock, or wildlife or as defined by the Illinois Environmental Protection Act or any federal law.
    b. "Hazardous Material Incident" means an incident which threatens public health or safety involving the actual or potential release of a hazardous substance or hazardous material.
    c. "Toxic" means any substance (other than a radioactive substance) which has the capacity to produce bodily injury or illness to man through ingestion, inhalation, or absorption through any body surface.
    d. "Corrosive" means any substance which, in contact with living tissue, causes destruction of tissue by chemical action, but does not refer to action or inanimate surfaces.
    e. "Irritant" means any substance, no corrosive, which, on immediate, prolonged or repeated contact with normal living tissue, will induce local inflammatory reaction.
    f. "Strong Sensitizer" means any substance with will cause on normal living tissue through an allergic or photo dynamic process, a hypersensitivity of the same substance.
    g. "Radioactive" means any substance which emits ionizing radiation.
    h. "Flammable" means any substance which has a flash point of less than 100 degrees Fahrenheit.
    i. "Combustible" means substance with a flash point greater than 100 degrees Fahrenheit.
    j. "Person" shall mean any individual, partnership, corporation, trust, firm, company, estate, association, or other legal entity.

Control of Hazardous Substances or Hazardous Materials:

a. It shall be unlawful for any person to use, store, deliver or transport hazardous substances or hazardous materials, or cause the use, storage, delivery of transporting of hazardous substances or hazardous materials in any manner inconsistent with the requirements of the Fire Prevention Code of the City of St. Charles or any other applicable City ordinance, County ordinance, State law or Federal law.
b. It shall be unlawful for any motor vehicle carrying, transporting or containing a hazardous substance or hazardous material to park or stand, other than temporarily for the purpose of, and while actually engaging in, loading or unloading, or private property, without the knowledge and express consent of the person who is in charge of the property and who is aware of the nature of the hazardous substance or hazardous material the motor vehicle contains.
c. It shall be unlawful for any person using, storing, manufacturing, producing, disposing, treating, transporting or causing the use, storage, manufacture, production, disposal,

treatment or transportation of any hazardous substance or hazardous material in any manner which results in a hazardous materials incident.

Hazardous Material or Hazardous Substance Incident Expense Recovery:

a. Any person causing or permitting a hazardous material incident shall be responsible for all of the following:
   1. Reimbursement in full, of any and all costs incurred by the City in connection with the operation (including equipment and vehicles), maintenance, and staffing required to respond to such hazardous materials incident. Vehicles and staffing will be charged the hourly rate of pay, including overtime expenses and overhead costs, for each employee who participates in such response to a hazardous materials incident. Any maintenance costs incurred by the City will be reimbursed at the rate of time and materials.
   2. Reimbursement, in full, for any and all costs incurred by the City for equipment and materials used, damaged, lost, spent, destroyed or rendered irreparable in connection with a hazardous materials incident.
   3. Assumption of, and all liability and costs for, any cleanup or removal resulting from any hazardous materials incident, including but not limited to any independent cleanup contractor necessitated by such hazardous materials incident.
   4. Any and all costs and reasonable attorney's fees incurred in connection with the enforcement of the Ordinance and any collection undertaken hereunder.

b. The City of St. Charles shall prepare and forward to the person or persons causing or permitting a hazardous material incident a bill for the total costs and expenses incurred for which such person or persons are responsible pursuant to this Section; provided, however, any costs in connection with any independent cleanup contractor shall be billed directly by such contractor. Payment of the total bill shall be made within thirty (30) days of receipt. Any bill or portion of a bill remaining unpaid after thirty (30) days of receipt shall accrue interest on the unpaid balance at the rate of 1 1/2% per month, or fraction of month.

Limitation of Liability: The City, its officers, agents or employees, shall not have any liability or responsibility for any claim, injury, or damage of any kind resulting from a hazardous material incident to which the City or any of its departments, officers, agents or employees responds.

Invalidity: Should any clause, sentence, paragraph or part of this Ordinance be declared a court of competent jurisdiction to be invalid, such decision shall not affect the validity of the Ordinance as a whole or any part thereof, other than the part so declared to be invalid.
(Ord. 2010-M-44 § 1; Ord. 2006-M-59 Pgrph D; 2004-M-76 § 1; Ord. 1988-M-15 § 1; Ord., 1978-M-37 Art. 5 (B).)

15.28.070 Appeals.

Any person may appeal a decision of the Chief of the Fire Department under this chapter, in the following manner:

A. **Appeal Step 1.** Any person may submit to the Fire Chief a Request for Reconsideration of the Decision. The Fire Chief and the person filing the Request for Reconsideration shall conduct a personal meeting to discuss the Request for Reconsideration within 14 days after the Request is submitted. Within 14 days after the personal meeting, the Fire Chief shall either affirm or modify the original decision.

B. **Appeal Step 2.** Any person who shall disagree with the affirmation or modification of the original decision by the Fire Chief provided for in Appeal Step 1 above, may appeal that decision to the City Building Board of Review of the City of St. Charles.

(Ord. 2010-M-44 § 1; Ord. 2004-M-76 § 1; Ord. 1978-M-37 Art. 5 (E).)

15.28.080 New materials, processes or occupancies requiring permits.

The Building Commissioner, the Chief of the Fire Department, and the Chief of the Bureau of Fire Prevention shall act as a committee to determine and specify, after giving affected persons an opportunity to

be heard, any new materials, processes or occupancies, which shall require permits, in addition to those now enumerated in the Fire Prevention Code. The Chief of the Bureau of Fire Prevention shall post such list in a conspicuous place in his office, and distribute copies thereof to interested persons.
(Ord. 2010-M-44 § 1; Ord. 2004-M-76 § 1; Ord. 1978-M-37 Art. 5 (F).)

15.28.090 Violation – Penalty.

Any violations of this chapter shall be enforced and prosecuted in accordance with the provisions of Chapter 15.101 of the St. Charles Municipal Code. The Chief of the Fire Department shall have all of the rights and responsibilities given to the Building Commissioner under Chapter 15.101 for the prosecution and enforcement of any violations under this chapter.
(Ord. 2010-M-44 § 1; Ord. 2004-M-76 § 1; Ord. 1978-M-37 Art. 5 (G).)

15.28.100 Fire Alarm Systems.

A. **Purpose and Intent.** The ordinance codified in this section is adopted for the purpose of regulating and permitting fire alarm systems to which the fire department is expected to respond and to supplement the provisions of the ICC International Fire Code, 2009 edition and the NFPA 101 Life Safety Code, 2009 edition as previously adopted.

B. **Applicability.** The provisions of this section shall apply to all fire alarm systems used and operated within the jurisdiction of the St. Charles Fire Department.

1. The provisions of this section shall not apply to any electric, wired, or battery operated, single station, multiple station smoke detectors or household fire alarm systems installed to alert the occupants of any 1 or 2 family residences to the danger of a fire.
2. For the purpose of supplementing the provisions contained in this section, the NFPA 72 – National Fire Alarm Code, 2007 edition, published by the National Fire Protection Association, is hereby adopted by reference as if fully set forth herein.

C. **Defintions.**

1. Alarm Notification Appliance – a fire alarm system component such as a bell, horn, speaker, light, or text display that provides audible, tactile, or visible outputs, or any combination thereof.
2. Alarm System – As defined in the national fire alarm code, a system or portion of a combination system consisting of components and circuits arranged to monitor and annunciate the status of fire alarm or supervisory signal-initiating devices and to initiate the appropriate response to those signals.
3. Alarm User – a person(s), firm, partnership, corporation, association, organization, company or other entity in control of a protected premise where an alarm system is located.
4. Audible Alarm – an alarm notification that alerts by sense of hearing.
5. Automatic Dialing Telephone Alarm – a device that automatically dials any of the Tri-Com Communications Center emergency telephone lines, without human activation of the device by the alarm user or employee of the alarm user, upon detection of an unauthorized entry or other unauthorized activity at a protected premise.
6. Calendar Year – means a 12-month period beginning January 1 and ending December 31 every year.
7. Central Station Service Fire Alarm System – a system or group of systems in which the operations of circuits and devices are transmitted automatically to, recorded in, maintained by, and supervised from a listed central station that has competent and experienced servers and operators in attendance at all times who, upon receipt of a signal, take such action as appropriate and required. Such service is to be controlled and operated by a person, firm, or corporation whose business is the furnishing, maintaining, or monitoring of supervised fire alarm systems.
8. City – means City of St. Charles.
9. Digital Alarm Communicator System – a system in which signals are transmitted from a digital alarm communicator transmitter located at a protected premise through the public switched telephone network to a digital alarm communicator receiver at a central alarm station or the Tri-Com Communication Center.

10. 2-way radio frequency system – a system in which signals are transmitted from a 2-way radio frequency system located at a protected premises via a radio frequency signal to a 2-way radio receiver at a central station or the Tri-Com Communication Center.
11. Fire Alarm Company – any person, firm, partnership, corporation, association, organization, company, or other entity engaged in the selling, leasing, maintaining, servicing, repairing, altering, replacing, moving or installing any fire alarm system or causing the same to be sold, leased, maintained, serviced, repaired, altered, replaced, moved, or installed in or on any building, structure or facility.
12. Fire Alarm Agent – means any person employed by, working for, representing, or subcontracted by a fire alarm company.
13. Fire Alarm Monitoring Agency – any person, firm, partnership, association, corporation, or organization which contracts with a fire alarm user to receive and initiate action on fire alarm system signals. The agency must be UL or FM listed for fire alarm monitoring.
14. Fire Chief – means the Chief of the City of St. Charles Fire Department or his designee.
15. False Fire Alarm – any activation or transmission of a fire alarm signal to the Tri-Com Communications Center or the St. Charles Fire Department where no actual emergency or fire condition exists as determined by the Fire Department. A false fire alarm may be caused by human error or mechanical malfunction, whether or not the exact cause of the error or malfunction is identified.
16. Mayor – Mayor of the City of St. Charles or his designee.
17. National Fire Alarm Code – NFPA 72, 2007 edition, published by the Nation Fire Protection Association.
18. Notice – written notice given by personal service upon the addressee, or, given by the United States Postal Office, postage paid, to the addressee's last known mailing address.
19. Nuisance Fire Alarm – The reoccurrence of an activated false fire alarm on a continuous basis and the alarm user has not taken the necessary action to prevent the continued occurrence of an activated false fire alarm.
20. Permittee – means any person, firm, partnership, corporation, association, organization, company, or other entity issued an alarm permit by the City.
21. Person – means a natural person, or a firm, partnership, corporation, association, organization, company, or other entity.
22. Prerecorded telephone message – means a prerecorded voice message transmitted or received over a telephone line.
23. Protected premises – any building, facility, structure, or physical location protected by a fire alarm system.
24. Response Fees – fees charged to an alarm user for responses to a false fire alarm activation.

D. **Permit Required.**

1. It is unlawful for any person, firm, partnership, corporation or other entity to use, own or lease a fire alarm system or to be in control of a protected premise, wherein an alarm system is operated or maintained without having first obtained a permit as provided in this chapter.
2. It is unlawful for any person, firm, partnership, corporation or other legal entity to use, own or lease an alarm system or to be in control of a protected premise, wherein an alarm system is operated or maintained when a permit therefore has been revoked.
3. A permit must be obtained for each separately addressed operating location.
4. No fee shall be charged to obtain an alarm user permit.
5. All permits issued are valid indefinitely unless revoked.

E. **Permit Application.** For every new fire alarm system and any time there is a change in the information required by this section, every fire alarm user shall file a completed or amended application for a fire alarm permit with the Fire Department for review and approval.

1. Each applicant for a permit to maintain a fire alarm system shall file a written application with the Fire Department stating:
    a. The full legal name, address and telephone number of the applicant.
    b. The name, address and telephone number of the proposed protected premises where the fire alarm is located.

c. Any fire alarm system designed to transmit a signal to a fire alarm monitoring agency shall include the name, address, and telephone number of said agency.
d. The type of fire alarm system at the protected premises.
e. A list of three persons, including their addresses and telephone numbers, who can be contacted and will respond to the protected premises in the event of an emergency or to reset or deactivate the fire alarm system, or who could contact the alarm user if the alarm user is not at the protected premises.
f. The name, address, and telephone number of the fire alarm company that installed the fire alarm.
g. The name, address, and telephone number of the fire alarm company that is responsible for the maintenance and repair of the fire alarm system, if applicable.

2. Incomplete applications shall be returned to the applicant:
   a. A permit will not be issued until the completed application is received and the Fire Chief or his designate has granted approval for the permit.
3. An application for an alarm user permit shall be denied if:
   a. The applicant has failed to pay false fire alarm fees required by this ordinance for a different protected premises under the applicant's ownership or control.
   b. The applicant has failed to comply with any provisions of this ordinance or other ordinances of the City.
4. The Fire Chief or his designate shall be responsible for processing and issuing alarm user permits.
5. It shall be unlawful for any alarm user to fail or refuse to amend its alarm user permit application within 14 days after any of the information required and obtained therein becomes outdated or inaccurate.

F. **Alarm Activation at a Protected Premises Where an Alarm User Permit has not Been Issued.** Each notice to the Tri-Com Communications Center or the Fire Department of an activation of a fire alarm system at the protected premises protected by a fire alarm which is not permitted shall be considered a separate violation of this chapter and any alarm user who does not have a valid fire alarm user permit will be assessed a fine in the amount of $300.

G. **Fire Alarm Systems; Maintenance and Testing.**
1. All fire alarm user installing a new fire alarm system or making alterations to an existing fire alarm system, shall provide the St. Charles Fire Department with information regarding system specifications including, but not limited to, wiring diagrams, floor plans, battery calculations and specification sheets for all components of the system as outlined in the national fire alarm code.
2. The St. Charles Fire Department shall approve the submitted specifications, diagrams, floor plans, and other required information for fire alarm systems prior to the installation of any equipment or wiring.
3. Before the City of St. Charles issues an occupancy permit for any multi-family or nonresidential structure, the St. Charles Fire Department shall inspect and approve the installation of the fire alarm systems.
4. The St. Charles Fire Department shall inspect and approve fire alarm systems in accordance with the national fire alarm code, applicable National Fire Protection Association (NFPA) standards, the fire prevention code, and the applicable requirements of this code, all as amended from time to time.
5. On an annual basis, all fire alarm systems shall be tested, and the system components shall be cleaned. A copy of the report documenting the results of annual testing and cleaning of the fire alarm system shall be copied to the Fire Department and kept on premises for three (3) years.
6. Fire alarm users are solely responsible for complying with the requirements of this chapter and shall not be exempt there from because of any inspection performed by the fire department.
7. The St. Charles Fire Department and its authorized agents are hereby authorized to reset any inoperable fire alarm system at any time such a condition is discovered or notice of such a condition is received. Neither the City nor the fire department shall have any

liability for taking such action, and the fire alarm system user shall remain solely responsible for the proper resetting, function, and operation of such system.

8. The St. Charles Fire Department may, at any prescheduled or reasonable time, test any multi-family or nonresidential fire alarm system.
9. If, upon inspection, any multi-family or nonresidential fire alarm system is determined to be inoperable, the St. Charles Fire Department may issue a warning notice or citation for a violation of the requirements of this article.
10. Within ten (10) days after the fire department issues a warning notice or citation for violation of the requirements of this article for an inoperable fire alarm system, the fire department shall re-inspect the inoperable fire alarm system to determine whether it has been repaired and is functioning properly.
11. Where such a fire alarm system remains inoperable at the time of the first re-inspection, additional citations may be issued, with each day the fire alarm system remains inoperable constituting a separate offense.

H. **Prohibited Activity.**

1. It shall be unlawful for any alarm user to fail or refuse to obtain a fire alarm permit or amend its fire alarm user permit application within 14 days after any of the information required and obtained therein becomes outdated or inaccurate.
2. It shall be unlawful for any fire alarm user to cause or permit the disconnection of any multi-family or nonresidential fire alarm system installed pursuant to the requirements of this article unless approved by the St. Charles Fire Department. The fire alarm user or fire alarm company shall notify the Fire Department of any such disconnection seven (7) days prior to the actual disconnection.
3. No individual, firm, partnership, corporation, association, organization, company, or other entity shall use or cause or permit to be used or engage in the business of providing any telephone device and telephone attachment that automatically activates 911 lines connected to any Regional Communications (PSAP) Public Safety Answering Point telephone, and then reproduce any voice message to report an emergency or fire condition. This includes prerecorded automatic voice alarms for elevators.
4. Each violation of this section shall be subject to a fine of not less than one hundred dollars ($100.00), and a separate offense shall be deemed committed on each day during or on which a violation occurs or continues.

I. **Transfer of Alarm User Permit Prohibited.** A fire alarm user permit cannot be transferred to another premises or to another person.

J. **False Alarms Prohibited.** It shall be unlawful for any person to start or spread any false alarm of fire or to knowingly activate a fire alarm system for the purpose of summoning the Fire Department except if such person knows or suspects that there is an actual emergency or fire condition on the premises.

K. **False Alarms – Fines – Notifications.** A response fee shall be imposed on all fire alarm users to reimburse the Fire Department for the increased costs associated with responding to excess false fire alarms from any fire alarm system at a single protected location.

1. Any alarm user who has more than three (3) false fire alarms within a calendar year at a single protected location will be assessed fines according to the following fine schedule:
   a. Four to five false fire alarms: $50 fine per false fire alarm
   b. Six to ten false fire alarms: $100 fine per false fire alarm
   c. More than ten false fire alarms: $300 fine per false fire alarm
2. After the third recorded false alarm within any calendar year for any alarmed premises, the Fire Chief or his designee, shall send an invoice for response fees to the fire alarm user. Such invoice shall be sent by postage paid U.S. mail or personally delivered to the user of the alarmed premises where the false fire alarm(s) occurred.
3. Any individual, firm, partnership, corporation, association, organization, company or other entity in control of a protected premises where an alarm system is located accused of a violation of this article may settle and compromise the claim or violation by paying the invoice for response fees to the City, within thirty (30) days of after it is mailed. Payment of such claim or claims shall be made at the Finance Department of the City. In the event such claim or claims are not paid within thirty (30) days, or if the alarm user otherwise

contests the validity of the claim, a complaint or notice to appear in court may be issued for the alleged violation.

4. The alarm user shall have the opportunity, within fourteen (14) days from the date of mailing or personal delivery, to submit a written request or meet with the Fire Chief for the purpose of showing cause as to whether circumstances exist to warrant voiding the invoice for response fees due to false fire alarm activations. The Fire Chief shall review the alarm user's report and/or meet with the alarm user and issue a written finding to the alarm user as to whether or not the invoice for response fees due to false fire alarm activations will be voided. The finding of the Fire Chief shall be final.
5. Any fire alarm user that exceeds the level of ten (10) false fire alarms per calendar year shall be required to enroll in the Underwriters Laboratory (UL) fire alarm certificate program. Such certificated users shall be subject to the UL random system inspections. Enrollment in this program would cease when the fire alarm user has demonstrated to the Fire Chief or his designate that the fire alarm system no longer transmits false fire alarms on a recurring basis.

L. **False Fire Alarm Determinations.**

1. There shall be a presumption that a fire alarm activation was a false fire alarm where the Fire Chief or his designee determines that;
   a. There is no evidence of a fire or other smoke, heat, or noxious fume condition on the protected premises that would warrant a call for immediate response from the Fire Department.
   b. There is no evidence that extraordinary weather conditions, electrical power failures, transmission line malfunctions or other circumstances beyond the control of the alarm user caused the activation of the fire alarm.
2. Whenever a new fire alarm system is installed, no fire alarm activation from such an alarmed premises shall be deemed to be a false fire alarm within the meaning of this chapter for a period not to exceed thirty (30) days after the approved installation of said fire alarm system.

M. **Permit Revocation.**

1. Any alarmed premise which has more than fifteen (15) false fire alarms within a calendar year, shall subject the alarm user to permit revocation as provided herein. If city records show more than fifteen (15) false fire alarms within a calendar year for any alarmed premises:
   a. The Fire Chief shall notify the alarm user by certified mail or personal delivery, their fire alarm permit shall be revoked 30 days from the date of mailing or personal delivery. The alarm user shall have 14 days from the date of mailing or personal delivery to submit a written report to the Fire Chief describing actions taken or to be taken to identify and eliminate the cause of the false fire alarms and to request that their alarm user's permit be reinstated.
   b. If the alarm user submits a report requesting reinstatement of their fire alarm user's permit, the Fire Chief shall determine if the action taken or to be taken will substantially reduce the likelihood of false fire alarms; if he determines that the action will substantially reduce the likelihood of false fire alarms, he shall notify the alarm user, via certified mail or personal delivery, that the request to reinstate the fire alarm user's permit has been approved.
   c. If the fire alarm user's permit is reinstated and the Fire Department responds to a subsequent false fire alarm activation in the same calendar year at the protected premises, the Fire Chief shall proceed with the permit revocation process again as described in this section. The alarm user shall also be assessed a fine in the amount of $300 for each subsequent false fire alarm through the remainder of the calendar year.
   d. If the Fire Chief determines that the action taken or to be taken will not substantially reduce the likelihood of false fire alarms, the request for reinstatement shall be denied. The Fire Chief shall give notice by certified mail or personal delivery to the user that the fire alarm permit will be revoked without further notice.

e. An alarm user whose fire alarm permit has been revoked by the Fire Chief may, within 14 days of receipt of notice of revocation, appeal this decision by filing a written request for a review meeting with the Mayor.

f. If a review meeting with the Mayor is requested, written notice of the time and place of the review meeting will be served on the alarm user by the Mayor by certified mail or personal delivery within 14 days of the request by the alarm user.

g. The Fire Chief and the alarm user shall have the right to present written and oral evidence, subject to the right of cross examination by both parties.

h. If the Mayor determines that the user has not taken action which substantially reduces the likelihood of false fire alarms, the Mayor shall issue written findings to that effect and an order denying reinstatement of the alarm user's fire alarm permit.

i. If the Mayor determines that the alarm user has taken action which substantially reduces the likelihood of false fire alarms, the Mayor shall issue written findings to that effect and an order approving reinstatement of the fire alarm user's permit.

j. If the alarm user's fire alarm permit is reinstated, pursuant to the preceding paragraph and the Fire Department responds to a subsequent false fire alarm activation in the same calendar year at the protected premises, the Fire Chief shall proceed with the permit revocation process as described in this section. The alarm user shall also be assessed a fine in the amount of $300 for each subsequent false fire alarm activation through the remainder of the calendar year.

2. Any alarm user permittee who fails to pay fines or charges provided for under this section within 30 days from the date of the invoice requesting payment of same, shall have the subject alarm user's fire alarm permit revoked. Any such alarm user fire alarm permit shall not be reinstated until all the unpaid fines and fees are paid in full.

N. **Testing Equipment.** No person shall conduct or cause to be conducted, any test or demonstration of any fire alarm system or signaling device that is directly connected to the Tri-Com Communications Center without first obtaining permission from Tri-Com. Permission to test shall not be required when the fire alarm system or signaling device is connected to an intermediary receiver and is not relayed to the Tri-Com Communications Center. Any test, which is not preceded immediately by notification to the Tri-Com Communications Center or pertinent central station, shall be deemed a false fire alarm as defined by this chapter.

O. **No Liability of City.** The city assumes no liability for any defects in the operations of any fire alarm system or signal line system for any failure or neglect of any person associated with the installation or maintenance of any fire alarm system, for any failure or neglect of any alarm user, for the transmission or receipt of fire alarm signals, or any failure or neglect to respond upon receipt of a fire alarm from any source. In the event that the City finds it necessary to revoke an alarm user's fire alarm permit or to otherwise provide for the disconnection of any fire alarm system, the City shall have no liability for such action. No special duty other than that owed to the general public shall be created by virtue of this ordinance or by virtue of the issuance of a fire alarm system permit, the direct connection of an alarm system to the Tri-Com Communication Center, or as a result of the transmission to or receipt of alarm signals by the Tri-Com Communications Center.

P. **Severability.** If any provision, clause, sentence, paragraph, section or part of this chapter or application thereof to any person or circumstance, shall for any reason be adjudged by a court of competent jurisdiction to be unconstitutional or invalid, said judgment shall not affect, impair, or invalidate the remainder of this chapter in the application of such provision to other persons or circumstances but shall be confined in its operation to the provision, clause, sentence, paragraph, section, or part thereof directly involved in the controversy in which such judgment shall have been rendered and to the person or circumstance involved. It is hereby declared to be the legislative intent of the City Council that this chapter would have been adopted had such unconstitutional or invalid provisions, clause, sentence, paragraph, section, or part thereof not been included.

Q. **Penalty for Violation.** Any person, firm, or corporation violating any provisions of this chapter in addition to the fees and specific fines established in this Chapter, may be fined as provided in Chapter 1.08 or as otherwise provided in this code. Each day during which a violation in this chapter continues or is permitted to exist shall be considered a separate and distinct offense.

(Ord. 2010-M-44 § 1; Ord. 2004-M-76 § 1; Ord. 2003-M-11 § 1; Ord. 1978-M-37 Art. 5 (P).)

15.28.110 New materials, processes or occupancies requiring permits.
Renumbered to 15.28.080.
(Ord. 2010-M-44 § 1; Ord. 2004-M-76 § 1; Ord. 1978-M-37 Art. 5 (F).)

15.28.120 Violation - Penalty.
Renumbered to 15.28.090.
(Ord. 2010-M-44 § 1; Ord. 2004-M-76 § 1; Ord.1978-M-37 Art. 5 (G).)

15.28.130 Section 6.2.(a) amended - permit for storage of cellulose nitrate plastics.
Removed in its entirety. (Ord. 2004-M-76 § 1; Ord. 1978-M-37 Art. 5 (H).)

15.28.140 Section 7.6 added - permit for storage of combustible fibers.
Removed in its entirety. (Ord. 2004-M-76 § 1; Ord. 1978-M-37 Art. 5 (I).)

15.28.150 Section 0.2(a) amended - Permit for dry-cleaning business.
Removed in its entirety. (Ord. 2004-M-76 § 1; Ord. 1978-M-37 Art. 5 (J).

15.28.160 Section 9.8 added - Automatic extinguishing systems.
Removed in its entirety. (Ord. 2004-M-76 § 1; Ord. 1978-M-37 Art. 5 (K).)

15.28.170 Section 11.2 amended - Marking of exitways.
Removed in its entirety. (Ord. 2004-M-76 § 1; Ord. 1978-M-37 Art. 5 (L).)

15.28.180 Section 11.3 amended - Lighting of exitways.
Removed in its entirety. (Ord. 2004-M-76 § 1; Ord. 1978-M-37 Art. 5 (M).)

15.28.190 Section 11.6 added - Number and location of exits.
Removed in its entirety. (Ord. 2004-M-76 § 1; Ord. 1978-M-37 Art. 5 (N).)

15.28.200 Section 13.4 amended - Bond and responsibility for fireworks display required.
Removed in its entirety. (Ord. 2004-M-76 § 1; Ord. 1978-M-37 Art. 5 (O).)

15.28.210 Section 14.6 - Fire alarm systems.
Removed in its entirety. (Ord. 2004-M-76 § 1; Ord. 2003-M-11 § 1; Ord. 1978-M-37 Art. 5 (P).)

15.28.220 Subsection (f) added to Section 16.27 - Testing of tanks and pipes.
Removed in its entirety. (Ord. 2004-M-76 § 1; Ord. 1978-M-7 Art. 5 (Q).)

15.28.230 Subsection (b) added to Section 16.37 - Testing of tanks and pipes.
Removed in its entirety. (Ord. 2004-M-76 § 1; Ord. 1978-M-7 Art. 5 (R).)

15.28.240 Subsection (c) added to Section 16.41 - Permit for aggregate capacity in excess of five gallons.
Removed in its entirety. (Ord. 2004-M-76 § 1; Ord. 1978-M-37 Art. 5 (S).)

15.28.250 Section 16.99 amended - Tank vehicles.
Removed in its entirety. (Ord. 2004-M-76 § 1; Ord. 1978-M-7 Art. 5 (T).)

15.28.260 Section 20.3(a) amended - Permit for storage of hazardous chemicals.
Removed in its entirety. (Ord. 2004-M-76 § 1; Ord. 1978-M-7 Art. 5 (U).)

15.28.270 Section 21.3.(a) amended - Permits and reports of installation.
Removed in its entirety. (Ord. 2004-M-76 § 1; Ord. 1978-M-7 Art. 5 (V).)

15.28.280 Section 21.10.(a) amended - Liquefied petroleum gas tank vehicles.
Removed in its entirety. (Ord. 2004-M-76 § 1; Ord. 1978-M-7 Art. 5 (W).)

15.28.290 Section 22.6 added - Location of lumberyards and woodworking plants.
Removed in its entirety. (Ord. 2004-M-76 § 1; Ord. 1978-M-37 Art. 5 (X).)

15.28.300 Section 23.3. amended - Permit for storage of magnesium.
Removed in its entirety. (Ord. 2004-M-76 § 1; Ord. 1978-M-37 Art. 5 (Y).)

15.28.310 Subsections (e) and (f) added to Section 28.3 - Smoking prohibited under certain conditions.
Removed in its entirety. (Ord. 2004-M-76 § 1; Ord. 1978-M-37 Art. 5 (Z).)

15.28.320 Section 28.16 amended - Fire department access.
Removed in its entirety. (Ord. 2004-M-76 § 1; Ord. 1978-M-37 Art. 5(AA).)

15.28.330 Section 28.17 added - Water supplies for fire department use.
Removed in its entirety. (Ord. 2004-M-76 § 1; Ord. 1978-M-37 Art. 5 (BB).)

15.28.340 Section 28.18 added - Fire extinguishers.
Removed in its entirety. (Ord. 2004-M-76 § 1; Ord. 1978-M-37 Art. 5 (CC).)

15.28.350 Section 28.19 added - Identification of fire hazard of materials.
Removed in its entirety. (Ord. 2004-M-76 § 1; Ord. 1978-M-37 Art. 5 (DD).)

15.28.360 Deferral of certain improvements.
Renumbered to 15.28.090. (Ord. 2004-M-76 § 1; Ord. 1993-M-31 § 1; Ord. 1978-M-37 Art. 6.)

15.28.370 Appeals.
Renumbered to 15.28.100. (Ord. 2004-M-76 § 1; Ord. 1993-M-31 § 2; Ord. 1978-M-37 Art. 7.)

15.28.380 New materials, processes or occupancies requiring permits.
Renumbered to 15.28.110. (Ord. 2004-M-76 § 1; Ord. 1978-M-37 Art. 8.)

15.28.390 Violation - Penalty.
Renumbered to 15.28.120. (Ord. 2004-M-76 § 1; Ord. 1993-M-31 § 3; Ord. 1978-M-37 Art. 9.)

Chapter 15.36

SWIMMING POOLS

Sections:

15.36.010	Short title.
15.36.020	Scope and purpose.
15.36.030	Definitions.
15.36.040	Construction of residential pool - Submittal of plans and specifications - permit issuance upon approval of plans.
15.36.050	Construction or remodeling of residential or public pool - Application for permit.
15.36.060	Construction or alteration of private pool - Permit fee.
15.36.070	Construction to be in accordance with approval plans.
15.36.080	Inspection of construction and equipment required.
15.36.090	Criteria for review and approval of plans.
15.36.100	Plans and specification - Contents - Waiver of requirements.
15.36.110	Residential pool - Design, construction and material standards.
15.36.120	Permit - Revocation.
15.36.130	Permit - Reissuance.
15.36.140	Inspection authorized.
15.36.150	Operation reports.
15.36.160	Violation - Penalty.

15.36.010 Short title.

The ordinance codified in this chapter shall be known as the "swimming pool ordinance," may be so cited, and will be referred to as this ordinance. (Ord. 1973-M-4 § I: Prior code Ch. 13 Art. VI (part).)

15.36.020 Scope and purpose.

The provisions of this chapter shall apply to all public, semipublic and private residential swimming pools as defined in Section 15.36.030. The purpose of this chapter shall be to provide a guide for the design and construction of such swimming pools so that health and safety hazards will be minimized and satisfactory operation can be achieved. (Ord. 1973-M-4 § II (Part): Prior code § 13.601.)

15.36.030 Definitions.

The following definitions shall apply in the interpretation and enforcement of this chapter. The word "shall" as used herein indicates a mandatory requirement.

A. "Building department" means that department assigned jurisdiction over swimming pool construction.

B. "Person" means any person, firm, partnership, association, corporation company, governmental agency, club or organization of any kind.

C. "Public pool" shall be defined as any pool, other than a residential pool, which is intended to be used collectively by numbers of persons for swimming or bathing and is operated by any person, whether he is owner, lessee, operator, licensee, or concessionaire, regardless of whether a fee is charged for such use. So that we may refer within the standard to various types of public pools they are listed in the following categories:

1. Any municipal, community, public school, athletic club or swimming club pool or pool for other similar usage and type. Also, pools for motels and apartments, multiple housing units, and hotels, not open to the general public.
2. Country club and institutional pools, such as for Girl Scouts, Boy Scouts, YMCA, YWCA, Campfire Girls, boys camps, girls camps, and for other similar type usage.

D. "Public swimming pool" means any swimming pool, other than a residential pool intended to be used collectively by numbers of persons for swimming or bathing and operated by any person as defined in this section, whether he is owner, lessee, operator, licensee, or concessionaire, regardless of whether a fee is charged for such use, is subject to this chapter, all applicable codes and state laws.

E. "Residential swimming pool" means any constructed pool, permanent or portable, which is intended for noncommercial use as a swimming pool by the owner family(ies) and its (their) guests, and which is over twenty-four inches in depth and:

1. Has a surface area exceeding two hundred fifty square feet; or
2. Has a volume over three thousand two hundred fifty gallons.

(Ord. 1978-M-4 § II (part): Prior code §§ 13.602. 13.603, 13.604, 13.605, 13.606.)

15.36.040 Construction of residential pool - Submittal of plans and specifications - Permit issuance upon approval of plans.

No person shall begin construction of a private residential swimming pool or shall substantially alter or reconstruct any such pool without first having submitted plans and specifications to the building department for review and approval and without having received a permit from the building department for construction. The plans shall be prepared by a registered architect or professional engineer.* All plans and specifications shall be submitted in duplicate (or additional copies as specified) and the building department shall arrange for review and approval of the plans and specifications by other appropriate departments concerned with such matters as zoning, electrical, structural, and plumbing requirements. A permit to construct, alter, or renovate shall be issued by the building department following approval of the plans including such approvals as may be required by other departments.

*The determination as to qualifications shall be based on state laws or regulations. (Ord. 1973-M-4 § III(part): Prior code § 13.607.)

15.36.050 Construction or remodeling of residential or public pool - Application for permit.

The application for permit to construct or remodel a residential or public swimming pool shall be on such forms as may be prescribed, together with any supporting data as may be required for the proper review of the plans by the building department. (Ord. 1973-M-4 § III(part): Prior code § 13.608.)

15.36.060 Construction or alteration of private pool - Permit fee.

The fee for a permit to construct or alter a private swimming pool shall be:

A. For the first four thousand dollars of estimated cost, thirty dollars;

B. From four thousand one dollars to twenty-nine thousand dollars per one thousand dollars of estimated cost, four dollars;

C. For each additional one thousand dollars or part thereof of estimated cost, one dollar and fifty cents.

(Ord. 1978-M-21 § 2; Ord. 1973-M-4 § VII: Prior code § 13.617.)

15.36.070 Construction to be in accordance with approval plans.

The swimming pool and facilities shall be built in accordance with the plans as approved unless approval of changes has been given in writing by the building department. (Ord. 1973-M-4 § III(part): Prior code § 13.609.)

15.36.080 Inspection of construction and equipment required.

The owner or his agent shall notify the building and health departments at specific predetermined states of construction and at the time of completion of the swimming pool to permit adequate inspection of the swimming pool and related equipment during and after construction. Such inspection shall be performed on notification and at reasonable hours. The swimming pool shall not be placed in operation until such inspections show compliance with the requirements of this chapter. (Ord. 1973-M_4 § III(part): Prior code § 13.610.)

15.36.090 Criteria for review and approval of plans.

The criteria to be followed by the building department in the review and approval of plans shall be promulgated as rules and regulations as authorized by this chapter. (Ord. 1973-M-4 § III(part): Prior code § 13.611.)

15.36.100 Plans and specifications - Contents - Waiver of requirement.

A. The plans shall be drawn to scale and accompanied by proper specifications so as to permit a comprehensive engineering review of the plans including the piping and hydraulic details and shall include:
   1. Plan and sectional view with all necessary dimensions of the pool;
   2. A piping diagram showing all appurtenances in sufficient detail as well as pertinent elevation data to permit a hydraulic analysis of the system, including details of water supply systems and drainage and wastewater disposal systems;
   3. The specifications shall contain details and catalog identification on all treatment equipment used.

B. Where the permit sought is for the construction, erection, or assembly of a swimming pool in the form of a complete kit or package sold as a unit, whether above, on, or below ground, the above set-forth requirements as to the submission of plans and specifications shall be waived if there is on file with the building department the plans, specifications, adequate supporting data and the like as may be supplied by the manufacturer or vendor of the kit or package.

(Ord. 1989-M-76 § 1; Ord. 1973-M-4 § III(part): Prior code § 13.612.)

15.36.110 Residential pool - Design, construction and material standards.

Design, construction, equipment and material standards for residential swimming pools as promulgated by the State Department of Public Health, Bureau of Environmental Health, and appropriate provisions of this Title 15, "Buildings and Construction" of the St. Charles Municipal Code shall govern the design, construction and operation of swimming pools. No permit to construct, alter, or remodel shall be granted unless the pool conforms with these standards. The standards shall cover but not be limited to the following items:

A. Structural design;
B. Dimensional design;
C. Materials of construction;
D. Deck equipment (steps, ladders, stairs, diving boards and platforms);
E. Fences, enclosures and safety equipment;
F. Electrical requirements;
G. Water supply;

H. Inlets and outs with the following specific requirements:
   1. Inlets. Pools shall be equipped with suitable facilities for adding make-up water as needed. There shall be no cross connection between the water supply line and the pool system. If a hose connection from a sillcock or other plumbing fixture is to be used for supplying make-up water of for filling purposes, then an approved cross connection control device shall be installed between the sillcock or control valve at the fixture on the hose connection.
   2. Outlets. Pools shall be equipped with facilities for completely emptying the pool and the discharge of the pool water to the storm sewer. No direct connection shall be made to the sanitary sewer. Backwash water is to be discharged indirectly to the sanitary sewer. Drainage of any pool shall be carefully controlled and provided for so that such drainage shall not cause flooding or damage to adjacent property.

I. Recirculation system (piping, fittings, filter, skimmers);
J. Skimmers;
K. Filters;
L. Pumps and strainers;
M. Valves;
N. Chemical treatment and disinfection;
O. Chemical feeding equipment;
P. Testing equipment;
Q. Wastewater disposal;
R. Lifesaving and emergency equipment;
S. Accessibility to telephone;
   1. Posted emergency
   2. Service telephone numbers,
   3. Fire,
   4. Police,
   5. Ambulance,
   6. Hospital.

(Ord. 1989-M-76 § 1; Ord. 1973-M-4 § IV: Prior code § 13.613.)

15.36.120 Permit - Revocation.

The building department may revoke any permit for failure to comply with the duly promulgated regulations referred to in this chapter or in cases where the permit has been obtained through nondisclosure, misrepresentation, or misstatements of material facts. (Ord. 1973-M-4 § V(part): Prior code § 13.614.)

15.36.130 Permit - Reissuance.

The permit shall be reissued upon proper application and upon presentation of evidence that the deficiencies causing revocations have been corrected. (Ord. 1973-M-4 § V(part): Prior code § 13.615.)

15.36.140 Inspections authorized.

The building department is authorized to conduct such inspections as it deems necessary to insure compliance with all provisions of this chapter and shall have right of entry at any reasonable hour to the swimming pool for this purpose. Health department inspections will be made when necessary. (Ord. 1973-M-4 § VI(part): Prior code § 13.616A.)

15.36.150 Operations reports.

A. The swimming pool manager or operator of a public pool shall record swimming pool operational data daily on a report form furnished by the city board of health.

B. A separate report form shall be completed for each pool in a multiple pool complex. The pool manager or operator shall submit the complete operational report to the city board of health on the first and sixteenth of each month. The manager or operator shall keep one copy for his records. Such records shall be open to inspection by the board of health, city sanitarian or authorized agent of the city sanitarian at all times.

15.36.160 Violation - Penalty.

Any person, firm or corporation violating any provision of this chapter shall be fined not less than five dollars nor more than five hundred dollars for each offense, and a separate offense shall be deemed committed on each day during or on which a violation occurs or continues. (Ord. 1973-M-4 § VIII: Prior code § 13.618.)

Chapter 15.40

PROPERTY MAINTENANCE CODE

Sections:

15.40.010 Property Maintenance Code – Regulations Adopted and Modified.

15.40.010 Property Maintenance Code – Regulations Adopted and Modified.

The provisions of the 2000 Edition of the *International Property Maintenance Code*, published by the International Code Council, Inc., 5203 Leesburg Pike, Suite 708, Falls Church, Virginia 22041-3401, are hereby adopted by reference, with the following amendments thereto:

A. Section 102.3. Delete in its entirety and substitute the following therefore:
"**102.3 Application of other codes.** Repairs, additions, or alterations to a structure, or changes of occupancy, shall be done in accordance with the procedures and provisions of Title 15, 'Buildings and Construction,' of the St. Charles Municipal Code."

B. Section 107.5. Delete in its entirety and substitute the following therefore:
"**107.5 Transfer of ownership.** It shall be unlawful for the owner of any dwelling unit or structure who has received a compliance order or upon whom a notice of violation has been served to sell, transfer, mortgage, lease or otherwise dispose of such dwelling unit or structure to another until the provisions of the compliance order or notice of violation have been complied with, or until such owner shall first furnish the grantee, transferee, mortgagee, or lessee a true copy of any compliance order or notice of violation issued by the code official."

C. Sections 111.1 through 111.7. Delete in their entirety and substitute the following therefore:
"**111.1 Application for appeal.** Any person directly affected by a decision of the code official or a notice or order issued under this code shall have the right to appeal to the Board of Zoning Appeals, provided that a written application for appeal is filed with the Building and Zoning Commissioner within 20 days after the day the decision, order or notice was served. An application for appeal shall be based on a claim that the true intent of this code or the rules legally adopted thereunder have been incorrectly interpreted, the provisions of this code do not fully apply, or the requirements of this code are adequately satisfied by other means, or that the strict application of any requirement of this code would cause an undue hardship."

D. Section 111.8. Delete in its entirety and substitute the following therefore:
"**111.2 Stays of enforcement.** Appeals of notice and orders (other than Imminent Danger notices) shall stay the enforcement of the notice and order until the appeal is heard by the Board of Zoning Appeals."

E. Section 302.8. Delete in its entirety and substitute the following therefore:
"**302.8 Motor Vehicles.**

1. Except as provided for in Title 17 of the St. Charles Municipal Code, any type of motor vehicle that (a) does not have a current state registration, or does not display a current state license plate with valid registration sticker affixed; or (b) a motor vehicle on which the engine, wheels or other parts have been altered, damaged or otherwise so treated that the vehicle is incapable of being driven shall not be parked, kept or stored outside of an enclosed building or structure on any premises, and no vehicle shall at any time be in a state of major disassembly, disrepair or in the process of being stripped or dismantled, outside an enclosed building or structure.

2. A collector may store unlicensed, operable or inoperable vehicles on the collector's property provided the vehicles and the outdoor storage area are maintained in such a manner that they do not constitute a health hazard and are screened from ordinary public view by means of a fence or other appropriate means.
   a. "Collector" means the owner of one or more special interest vehicles for the collector's own use in order to restore, preserve, and maintain a special interest vehicle and historic interest.
   b. "Special Interest Vehicle" means a motor vehicle of any age, which has not been altered or modified from original manufacturer specificiations and, because of its historic interest, is being preserved by hobbyists."

F. Section 303.6. Delete in its entirety and substitute the following therefore:
"**303.6 Exterior walls.** Every exterior wall shall be free of holes, breaks, loose or rotting boards or timbers and any other conditions which might admit rain or dampness to the interior portions of the walls or occupied spaces of the buildings. All exterior surface material must be painted or treated in a manner normally acceptable for that material so that weather will not cause unreasonable deterioration and all siding material must be kept in repair."

G. Section 303.7. Delete in its entirety and substitute the following therefore:
"**303.7 Roofs and drainage.** The roof and flashing shall be sound, tight, and not have defects which might admit rain. Roof drainage shall be adequate to prevent rainwater from causing dampness in the walls or interior portion of the building. Where provided, gutters and downspouts shall be safely secured, free from holes and defects, and maintained in good repair. Roof water shall not be discharged in a manner that creates a public nuisance."

H. Section 303.14. Delete in its entirety and substitute the following therefore:
"**303.14 Insect screens.** During the period from April 1 to October 31, every door, window and other outside opening utilized or required for ventilation purposes serving any structure containing habitable rooms, food preparation areas, food service areas, or any areas where products to be included or utilized in food for human consumption are processed, manufactured, packaged, or stored, shall be supplied with approved tightly fitting screens of not less than 16 mesh per inch and every swinging door shall have a self-closing device in good working condition.
Exception: Screen doors shall not be required where other approved means, such as air curtains or insect repellent fans, are employed."

I. Section 305.3.1. Delete in its entirety and substitute the following therefore:
"**305.3.1 Garbage facilities.** The owner of every dwelling shall supply one of the following: an approved mechanical food waste grinder in each dwelling unit, or a leakproof, covered outside garbage container.
Exception: In residential buildings containing three (3) or less dwelling units, each occupant shall be responsible for providing any covered outside garbage containers."

J. Add a Section 404.8 as follows:
"**404.8 Basement rooms.** Basement areas partially below grade used for living purposes shall meet the following requirements:
   1. Floors and walls shall be watertight and insulated so as to prevent entry of moisture.
   2. Total window area, total openable area, and ceiling height shall be in accordance with the St. Charles Municipal Code Section 15.04.010 (Building Code) and 15.04.020 (Residential Code).
   3. The required window area of the habitable area shall be entirely above the grade of the ground adjoining such window area except that openable windows which open into a window well extended to the finished grade outside are acceptable.

K. Add a Section 404.9 as follows:
"**404.9 Correctional and institutional learning.** Except where preempted by State or Federal legislation or regulations, this code shall regulate the space requirements of correctional institutions and institutions of higher learning."

L. Section 503.1. Delete in its entirety and substitute the following therefore:
"**503.1 Privacy.** Toilet rooms and bathrooms shall provide privacy and shall not constitute the only passageway to a hall or other space, or to the exterior. Toilet rooms and bathrooms shall be designed and arranged to provide privacy by means of a door and latch."

M. Section 602.3. Delete in its entirety and substitute the following therefore:
"**602.3 Heat supply.** Every owner and operator of any building who rents, leases, or lets one or more dwelling unit, rooming unit, dormitory or guestroom on terms, either expressed or implied, to furnish heat to the occupants thereof shall supply sufficient heat during the period from October 1 to April 1 to maintain a room temperature of not less than 65 degrees F (18 degrees C) during the hours between 6:30 a.m. and 10:30 p.m. of each day and not less than 60 degrees F (16 degrees C) during other hours.

N. Section 602.4. Delete in its entirety and substitute the following therefore:
"**602.4 Non-residential structures.** Every enclosed occupied work space shall be supplied with sufficient heat during the period from October 1 to April 1 to maintain a temperature of not less than 65 degrees F (18 degrees C) during all working hours.
Exceptions:
1. Processing, storage, and operation areas that require cooling or special temperature conditions.
2. Areas in which persons are primarily engaged in vigorous physical activities.

O. Section 704. Delete Section 704.1, 704.2 and 704.3 in their entirety.

(Ord. 2003-M-4 § 1; Ord. 1999-M-5 § 1; Ord. 1996-M-30 § 1; Ord. 1984-M-12 § 1.)

Chapter 15.44

FAIR HOUSING REGULATIONS[6]

Sections:

15.44.010	Declaration of policy.
15.44.020	Definitions.
15.44.030	Fair housing board - Created - Composition - Members' appointment and terms - Quorum.
15.44.040	Fair housing board - Duties.
15.44.050	Prohibited acts.
15.44.060	Complaint - Filing required - Contents - Distribution of forms.
15.44.070	Complaint - Filing with city clerk - Transmittal to board chairman.
15.44.080	Complaint - Investigation - Action by board to eliminate unfair practice - Hearing.
15.44.090	Hearing - Issuance of notice and copy of complaint to all parties.
15.44.100	Hearing - Rights of complainant.
15.44.110	Hearing - Powers of board.
15.44.120	Hearing - Report and recommendations of board.
15.44.130	Order to cease and desist unfair practice.
15.44.140	Dismissal of complaint.
15.44.150	Enforcement.
15.44.160	Remedies.
15.44.170	Violation - Penalty.

15.44.010 Declaration of policy.

A. In furthering the policy of the state as expressed in its Constitution and other laws, and for the protection of public health, public safety, and public morals, it is declared to be the public policy of the city that the city council do all that it may lawfully do to ensure equal opportunity to all persons within its corporate limits to live in decent housing facilities without any discrimination against them in acquiring such facilities because of their race, color, religion, ancestry or national origin.

B. It is further declared to be the policy of the city that, in a spirit of harmony, the city council shall endeavor to work with, and cooperate with the St. Charles community council on human relations, the board of realtors and the financial institutions of the city, and individual members thereof, to the end that the declared purpose of this chapter, which is to ensure the opportunity for all persons to live in decent housing facilities without discrimination because of race, color, religion, ancestry or national origin of such persons, can be accomplished in an orderly, lawful and proper fashion.

(Ord. 1968-35 § 1.)

15.44.020 Definitions.

As used in this chapter, unless a different meaning clearly appears from the context, the following terms shall have the meanings ascribed to them in this section:

A. "Discriminate" or "discrimination" means any difference in the terms of the sale, lease, rental, or financing of housing units or housing accommodations to a person applying for such sale, lease, rental, or financing, because of the race, color, religion, ancestry or national origin of such person.

B. "Housing accommodation" includes any building, structure, or portion thereof which is used or occupied, or is maintained, arranged, or designed to be used or occupied, as a home or residence.

C. "Owner" means the person holding title or legally representing the person who holds title to property.

D. "Person" includes any group of persons, partnership, corporation, or any other legal entity.

E. "Real estate broker" means any natural person, partnership, association or corporation, or agent thereof, who for a fee or other valuable consideration offers, sells, purchases, exchanges, or rents or negotiates, for the sale, purchase, exchange or rental of the real property of another or holds himself out as engaged in the business of selling, purchasing, exchanging or renting the real property of another, or collects rental for the use of the real property of another.

(Ord. 1968-35 § 2.)

15.44.030 Fair housing board - Created - Composition - Members' appointment and terms - Quorum.

A. There is created a fair housing board hereinafter referred to as the board, which shall consist of five members, all being residents within the corporate limits of the city, and shall be appointed by the mayor subject to the approval of the city council. Three members of the board shall be appointed as follows: One each from among two nominees submitted to the mayor by each of the following groups: St. Charles lending institution, St. Charles board of realtors and the St. Charles community council on human relations. The other two members shall be appointed at large by the mayor. The mayor shall designate one of the members to be its chairman, any three members of the board shall constitute a quorum.

B. The term of office of each member of the board shall be for two years, until his successor is qualified; provided, however, that of the members first appointed, two shall be appointed for a term of one year, and three including the chairman shall be appointed for two years. Members of the board shall serve without pay.

(Ord. 1975-M-37; Ord. 1968-35 § 4.)

15.44.040 Fair housing board - Duties.

It shall be the duty of the fair housing board to:

A. Act to eliminate discriminatory practices as specified in Section 15.44.050 and to receive and investigate complaints charging unlawful housing practices;

B. Seek conciliation of such complaints, hold hearings, make findings of fact, issue orders and publish its findings of fact and others in accordance with the provisions of this chapter;

C. Render from time to time, but not less than every three months, a written report of its activities and recommendations with respect to fair housing practices to the mayor and to the city council; and

D. Adopt such rules and regulations as may be necessary to carry out the purposes of this chapter.

(Ord. 1968-35 § 5.)

15.44.050 Prohibited acts.

A. It shall be an unfair housing practice and unlawful for any real estate broker , real estate salesman or agent thereof licensed as such by the state any owner or any other person or any lending institutions:

1. To publish, circulate, issue or display, or cause to be published, circulated, issued or displayed, any communication, notice, advertisement, sign, or other writing of any kind relating to the sale, rental or leasing of any housing accommodation within the city which

will indicate or express any limitation or discrimination in the sale, rental or leasing of such housing accommodation, predicated upon the race, color, religion, ancestry, or national origin of any prospective buyer, lessee or renter of such property;

2. To discriminate, or to participate in discrimination, in connection with borrowing or lending money, guaranteeing loans, accepting mortgages or otherwise obtaining or making available funds for the purchase, acquisition, construction, rehabilitation, repair or maintenance of any housing accommodations in the city because of race, color, religion ancestry, or national origin;
3. It shall be an unlawful housing practice and a violation of this ordinance for any owner or other person to sell or lease a real property on terms, conditions or privileges that discriminate between persons because of race, color, religion or national origin;
4. To solicit for sale, lease or listing for sale or lease, any housing accommodation within the city on the ground of loss of value due to the present or prospective entry into any neighborhood of any person or persons of any particular race, color, religion, ancestry, or national origin;
5. To distribute or cause to be distributed, written material or statements designed to induce any owner of any housing accommodation in the city to sell or lease his property because of any present or prospective change in the race, color, religion, ancestry, or national origin of persons in the neighborhood;
6. To make any misrepresentations concerning the listing for sale or the anticipated listing for sale or the sale of any housing accommodation for the purpose of inducing or attempting to induce the sale or listing for sale of any housing accommodation by representing that the presence or anticipated presence of persons of any particular race, religion, color, or national origin in the area will or may result in the lowering of property values in the block, neighborhood, or area in which the property is located;
7. To make any distinction, discrimination or restriction against any person in the price, terms, conditions or privileges of any kind relating to the sale, rental, lease or occupancy of any housing accommodation in the city or in furnishing of any facilities or services in connection therewith, predicated upon the race, color, religion, national origin or ancestry of the prospective or actual buyer or tenant thereof;
8. To refuse to sell, lease or rent, any housing accommodation within the city because of race, color, religion or national origin or ancestry;
9. To refuse to show to any qualified buyer who has specified his needs and demonstrated his ability to finance the purchase or lease of real property, the list or other records identifying all real properties reasonable meeting such specifications;
10. To deliberately and knowingly refuse examination of copies to any qualified buyer of any listing of housing accommodations in the city to any person because of race, color, religion or national origin or ancestry;
11. To enter into a listing agreement which prohibits the sale or rental of housing accommodations to any person because of race, color, creed, religion or national origin or ancestry;
12. To act or undertake to act with respect to any housing accommodation the disposition of which is prohibited to any person because of race, color, creed, religion or national origin or ancestry;
13. To solicit an agent to sell any housing accommodation with any limitations or its sale based on race, color, religion or national origin;
14. To harass, intimidate or threaten any real estate broker, real estate salesman or agent thereof, owner or any other person who is about to sell or lease or has sold or leased any housing accommodations or is about to buy or lease or has bought or leased any housing

accommodation, when the harassment, intimidation or threat relates to an attempt to sell, buy or lease a housing accommodation, or refers to a sale, purchase or lease of a housing accommodation.

B. Nothing in this chapter shall require any person to offer housing or business accommodations for sale or lease or to show such accommodations to any person if such person is not negotiating for the purchase or lease thereof in good faith, either for himself or principal.

C. Nothing in this chapter shall be deemed to prohibit any real estate broker, real estate salesman, any owner or any other person from giving preference to prospective tenants or buyers for any reason other than the religion, race, color or national origin of the prospective tenant or buyer.

(Ord. 1968-35 § 3.)

15.44.060 Complaint - Filing required - Contents - Distribution of forms.

Any person aggrieved in any manner by a violation of the provisions of this chapter shall file a written complaint setting forth his grievance with the fair housing board. Said complaint shall state the name and address of the complainant and of the persons against whom the complaint is brought, and shall also state the alleged facts surrounding the alleged violation of this chapter. The board shall provide a printed form of complaint for the use of citizens and copies of this form shall be distributed to all appropriate religious, civic, business and labor groups concerned with achieving fair housing for all citizens. Any complaint must be filed within sixty days after the alleged unfair housing practice occurred or it shall be barred. (Ord. 1968-35 § 6(a).)

15.44.070 Complaint - Filing with city clerk - Transmittal to board chairman.

Each complaint shall be filed with the city clerk. The city clerk shall immediately transmit the complaint to the chairman of the fair housing board. (Ord. 1968-35 § 6(b).)

15.44.080 Complaint - Investigation - Action by board to eliminate unfair practice - Hearing.

After the filing of any complaint, the board shall make a prompt investigation in connection therewith; and, if it determines after such investigation that probable cause exists for crediting the allegations of the complaint, it shall immediately endeavor to eliminate the unlawful discriminatory practice complained of by conference, conciliation and persuasion. In case of a determination that probably cause does not exist, the board shall make written findings of fact and shall send copies thereof to the complainant and the person charged within twenty days from the date of the filing of the complaint. If attempts at conciliation are not successful within thirty days after the filing of the complaint, the board shall then proceed promptly with a full hearing of the complaint. (Ord. 1968-35 § 6(c).)

15.44.090 Hearing - Issuance of notice and copy of complaint to all parties.

In case of failure so to eliminate such practice, or in advance thereof, if in its judgment circumstances so warrant, it shall cause to be issued and served in the name of the board, a written notice together with a copy of such complaint, to all parties, of a full hearing of the complaint at a time and place to be specified in such notice. The notice and complaint shall be served on all parties not less than seven days before the time set for the public hearing, which hearing shall be held not later than forty-five days from the date of the filing of the complaint. (Ord. 1968-35 § 6(a).)

15.44.100 Hearing - Rights of complainant.

The person charged with having engaged in or engaging in the unfair housing practice shall have the right to file an answer to the complaint, to appear at the hearing in person, to be represented by counsel, and to submit testimony. The complainant shall be allowed to present testimony in person or by counsel. (Ord. 1968-35 § 6(e).)

15.44.110 Hearing - Powers of board.

Such hearing shall be conducted by the board. The board shall not be bound by strict rules of evidence prevailing in courts of law or equity. The board shall have full power to subpoena witnesses and pertinent documents, which power may be enforced by the board by proper petition to any court of competent jurisdiction. The board shall have power to administer oaths and to take sworn testimony. (Ord. 1968-35 § 6(f).)

15.44.120 Hearing - Report and recommendation of board.

At the conclusion of the hearings, the board shall render a written report and recommendation, which shall be served by mail upon the parties. No report shall be delayed more than sixty days after the date of the issuance of notice for commencement of the first hearing. (Ord. 1968-35 § 6(g).)

15.44.130 Order to cease and desist unfair practice.

If, upon all the evidence at the hearing, the board finds that the person charged has engaged in, or is engaging in an unfair housing practice as defined in this chapter, the board shall state its findings of fact and shall issue and cause to be served upon such person an order requiring such person to cease and desist from such unfair housing practice, and to take such affirmative or other action as, in the judgment of the board, will effectuate the purposes of this chapter, including a requirement of a report of the manner of compliance. The board shall retain jurisdiction of the case until it is satisfied that the person has complied with the order. (Ord. 1968-35 § 6(h).)

15.44.140 Dismissal of complaint.

If, upon all the evidence at the hearing, the board finds that the person has not engaged in any unfair housing practice, the board shall state its findings of fact and shall issue and cause to be served upon the complainant an order dismissing the complaint. A copy of its order shall be delivered, in all cases, by the board to the complainant, to the person charged, and to the mayor. (Ord. 1968-35 § 6(i).)

15.44.150 Enforcement.

A. The board shall be empowered, at the conclusion of the proceedings held under Sections 15.44.060 through 15.44.140, to recommend to the city council that the council order any person found to be engaging in any unfair real estate practice to cease and desist from such practice, upon such terms as shall be necessary and proper for the enforcement of this chapter.

B. The board shall be empowered at the conclusion of proceedings held under Section 15.44.060 through 15.44.140, as part of its report, to recommend to the city council that it direct the corporation counsel of St. Charles to do any one or more of the following:

1. To institute and prosecute proceedings to enforce, against any person found in violation of this chapter, the fine provided for in Section 15.44.170;
2. To apply to any court of competent jurisdiction:
   a. For an order restraining any person from violating any provision of this chapter,
   b. For such other or future relief as may seem to the court appropriate for the enforcement of this chapter and for the elimination of violations hereof;

3. To petition or institute proceedings with the Illinois Department of Registration and Education for the purpose of causing the department to revoke, suspend or refuse to renew the license granted by such department to any real estate broker or real estate salesman found to have violated any provision of this chapter;
4. In the case of any unlawful real estate practice or violation of this chapter by any person in the course of performing under a contract or subcontract with the state or any political subdivision or agency thereof, or with the United States of America, or any agency or instrumentality thereof, to petition or institute proceedings with such contracting agency for the purpose of causing it to terminate such contract or any portion thereof, either absolutely or on condition of compliance with the provisions of this chapter.

C. After receipt of the recommendation of the board, the city council may issue such cease and desist orders and may direct such action by the corporation counsel, including the procedures set forth in subsection B of this section, as shall be necessary for the enforcement of this chapter.

D. If, during the course of any proceedings prescribed herein, the board, on the basis of the evidence before it, concludes that a violation of this chapter is imminent, it may relay such evidence to the city council, together with its recommendation that the corporation counsel be instructed to seek injunctive relief in any court of competent jurisdiction to prohibit such violation.

(Ord. 1968-35 § 7.)

15.44.160 Remedies.

Any person aggrieved in any manner by the violation of any provision of this chapter who has exhausted the remedies provided in Sections 15.44.060 through 15.44.140, may apply to any court of competent jurisdiction for appropriate relief from such violation, including;

A. An order compelling compliance with this chapter;

B. An order to prohibit any person found by the court to have violated any provision of this chapter from the sale, lease, exchange, transfer, conveyance or assignment of any real property, by any person who in violation of this chapter refuses or fails to perform such contract;

C. Compensatory damages;

D. Such other and further relief as may seem appropriate to the court for the enforcement of this chapter and the elimination of violations hereof.

(Ord. 1968-35 § 8.)

15.44.170 Violation - Penalty.

A. The board is also empowered at the conclusion of such proceedings and as a part of its report to file with the mayor and city council, for the purpose of having the mayor and city council file with the Department of Registration and Education of the State, a complaint against any broker found guilty of violating any provision of this chapter, seeking suspension or revocation of the license issued to such broker by the state.

B. In addition thereto, the board may include as part of its report a recommendation to the city attorney for prosecution of any person who violates any provision of this chapter of who fails to comply with any order of the board.

C. Any person who violates any provision of this chapter shall be fined no less than one hundred dollars for each offense and no more than five hundred dollars for each violation.

(Ord. 1968-35 § 9.)

Chapter 15.101

ADMINISTRATION, ENFORCEMENT, FEES AND PENALTIES[7]

Sections:

15.101.010	Administration provisions adopted.
15.101.020	Applicability. (REMOVED)
15.101.030	Ordinary repairs. (REMOVED)
15.101.040	Installation of service equipment. (REMOVED)
15.101.050	Maintenance. (REMOVED)
15.101.060	Change in existing use. (REMOVED)
15.101.070	Existing structures. (REMOVED)
15.101.080	Department of building inspection. (REMOVED)
15.101.090	Duties and powers of building commissioner. (REMOVED)
15.101.100	Approval. (REMOVED)
15.101.110	Inspection (REMOVED)
15.101.120	Right of entry. (REMOVED)
15.101.130	Application for permit. (REMOVED)
15.101.140	Permits. (REMOVED)
15.101.150	Conditions of permits.
15.101.160	Demolition of structures. (REMOVED)
15.101.170	Moved structures. (REMOVED)
15.101.190	Certificate of use and occupancy. (REMOVED)
15.101.200	Posting structures. (REMOVED)
15.101.210	Violations. (REMOVED)
15.101.220	Stop work order. (REMOVED)
15.101.230	Unsafe structures. (REMOVED)
15.101.240	Emergency measures. (REMOVED)
15.101.250	Board of survey. (REMOVED)
15.101.260	Board of appeals. (REMOVED)
15.101.270	Architectural, engineering and contractor services. (REMOVED)
15.101.280	Validity. (REMOVED)

15.101.010 Administration Provisions Adopted.

The provisions of Chapter 1, “Administration” of the 2003 International Building Code issued by the International Code Council, Inc. 4051 West Flossmoor Road, Country Club Hills IL 60478, not less than three (3) copies of which have been and are on file in the Office of the Clerk of the City of St. Charles, Illinois for more than thirty days, are hereby adopted as the administrative provisions of the St. Charles Building Code as described herein, with the following amendments:

Section 101: Amend Sections 101.1, 101.2, 101.4.1, and 101.4.4 to read as follows:

101.1 Title. Chapters 15.04, 15.08, 15.20, 15.36 and 15.101 of Title 15 of the St. Charles Municipal Code, including the state and national codes adopted therein by reference, shall be known and may be cited as the "St. Charles Building Code," hereinafter referred to as "this Code."

101.2 Scope. The provisions of this Code shall apply to the construction, alteration, movement, enlargement, replacement, repair, equipment, use and occupancy, location, maintenance, removal and demolition of every building and structure and any appurtenances connected or attached to such buildings or structures, except as such matters are otherwise more specifically provided for in other ordinances or statutes.

101.4.1 Electrical. The provisions of the 2002 edition of the National Electrical Code, NFPA 70, issued by the National Fire Protection Association, Inc., One Batterymarch Park, Quincy, Massachusetts 02269 (hereinafter sometimes referred to as the "NEC"), with amendments as contained in Section 15.04.040, shall apply to the installation of electrical systems, including alterations, repairs, replacement, equipment, appliances, fixtures, fittings and appurtenances thereto. Where the 2003 IBC refers to the ICC Electrical Code, the NEC shall be substituted.

101.4.4 Plumbing. The provisions of the 1998 Edition of the Illinois Plumbing Code compiled by the Illinois Department of Public Health, with amendments as adopted in Section 15.04.050, shall apply to the installation, alteration, repair and replacement of plumbing systems, including equipment, appliances, fixtures, fittings and appurtenances, and where connected to a water or sewage system and all aspects of a medical gas system. The provisions of Section 13.12.235 "Private sewage disposal systems requirements generally" of the St. Charles Municipal Code shall apply to private sewage disposal systems. Where the 2003 IBC refers to the International Plumbing Code, the Illinois Plumbing Code as adopted in Section 15.04.050 shall be substituted.

Section 102: Amend Section 102.2 to read as follows and add sections 102.7 and 102.8, as follows:
102.2 Other laws. The provisions of this Code shall not be deemed to nullify any provisions of local, state or federal law. The provisions of this Code shall apply whether or not the property as defined in the Condominium Property Act (765 ILCS 605/1 et seq.), is subject to the act.

102.7 Matters Not Provided For. Any requirement essential for structural, fire or sanitary safety or an existing or proposed building or structure, or essential for the safety of the occupants thereof, and which is not specifically covered by this Code, shall be determined by the Building and Zoning Commissioner.

102.8 Other Chapters. When the provisions specified in this Code for health, safety and welfare are more restrictive than other provisions of the St. Charles Municipal Code, this Code shall control; when the other provisions of the St. Charles Municipal Code are more restrictive than the provisions of this Code, the other provisions of the St. Charles Municipal Code shall control.

Section 103: Delete all of Section 103 and substitute a new Section 103, "Building and Zoning Division" therefor:
Section 103 Building and Zoning Division
103.1 Building and Zoning Division. The Building and Zoning Division is created within the Department of Community Development and the executive official in charge thereof shall be known as the Building and Zoning Commissioner.

103.2 Organization. The Building and Zoning Commissioner shall request employment of technical assistants, inspectors and other employees as shall be necessary for the administration of this Code and as authorized by the Director of Community Development.

103.3 Assistant(s) to Building and Zoning Commissioner. The Building and Zoning Commissioner, subject to the approval of the Director of Community Development, may designate an employee(s) as his assistant(s) who shall exercise all the powers of the Building and Zoning Commissioner during his temporary absence or disability.

103.4 Conflict of Interest. The Building and Zoning Commissioner or any of his employees shall not be engaged in or directly or indirectly connected with the furnishing of labor, materials or appliances

for the construction, alteration or maintenance of any building within the City, or the preparation of plans or of specifications therefor, unless he or she is the owner of the building; nor shall such officer or employee engage in any work which could conflict with his official duties or with the interests of the City, without the consent and/or direction of the Director of Community Development.

103.7 Interdepartmental Cooperation. The assistance and cooperation of the police, fire, finance and public works departments shall be available to the Building and Zoning Commissioner as required in the performance of his duties.

Section 105: Amend paragraphs 105.3.2 and 105.4 to read as follows, and add paragraphs 105.8 and 105.9, as follows:

105.3.2 Time Limitation of Application. An application for a permit for any proposed work shall be deemed to have been abandoned ninety days after date of filing, unless such application has been diligently prosecuted or a permit shall have been issued; except that for reasonable cause, the Building and Zoning Commissioner may grant one or more extensions of time for additional periods not exceeding ninety days each. The extension shall be requested in writing and reasonable cause demonstrated.

105.4 Validity of Permit. Every permit shall become invalid unless the work authorized by such permit is commenced within ninety days after its issuance, or if work authorized by such permit is suspended or abandoned for a period of six months after the time the work is commenced; provided, that, for cause, one or more extension of time, for period not exceeding ninety days each, may be allowed by application, in writing, to the Building and Zoning Commissioner. Lack of request for inspections shall constitute abandonment of work. In no case shall a permit be valid for a longer period of time than two years.

105.8 Transfer of Permit. A permit may not be transferred by the person to whom it is issued, to another person, without the written approval of the Building and Zoning Commissioner.

105.9 Failure to Obtain a Permit. If any person commences any work on a building or structure before obtaining the necessary permit from the building department, he shall be subject to the penalty prescribed in this chapter. Where work is commenced before a permit is obtained, the permit fees set forth in Section 15.101.150 shall be doubled.

Section 106: Add Sections 106.1.4, 106.2.1, 106.6, 106.6.1, 106.7, and 106.8 as follows:

106.1.4 Copies. The Building Commissioner shall establish the number of copies of construction documents that are required for review by City officials and outside review agencies, and may require the applicant to submit the necessary number of copies prior to commencing review.

106.2.1 Surveys. All required boundary line surveys shall be made by a land surveyor licensed in Illinois. Upon completion of the foundation and prior to any construction beyond the foundation stage, a survey verifying the elevation of the top of the foundation, front, both sides, and the rear setbacks from their respective lot lines, signed and sealed by a registered Illinois land surveyor, shall be submitted to and approved by the Building and Zoning Commissioner.

106.6 Special Professional Services. When applications for unusual designs or magnitude of construction are filed, or where code reference standards and/or an applicable appendix require special architectural or engineering review or inspections, the Building and Zoning Commissioner may require one or both of the following special professional services:

1. Full-time project representation by an architect or engineer in addition to that which is otherwise required. The project representative shall keep daily records and submit reports in writing as may be required by the Building and Zoning Commissioner.
2. Review of plans, specifications, calculations, or other information submitted by the permit applicant, by an architect or engineer selected by the Building and Zoning Commissioner.

106.6.1 Determination of Special Requirement and Costs. The special professional service requirement shall be determined prior to the issuance of the building permit and shall be a requisite for the permit issuance. Refusal by the applicant to provide such service as required by the Building and Zoning Commissioner shall result in the denial of the permit. All fees and costs related to the performance of special professional services shall be borne by the applicant and shall be paid prior to issuance of the final certificate of occupancy."

106.7 Certificate of Compliance with Code. It is unlawful for any architect or structural engineer or professional engineer or other person permitted under the laws of the state to make drawings and plans, to prepare or submit to the Building and Zoning Commissioner, for his approval, any final drawings or plans for a structure which does not comply with the requirements of this Code. All drawings and plans submitted to the Building and Zoning Commissioner for approval for any building or structure, shall be accompanied by a certificate of the architect or structural engineer or professional engineer preparing such drawings and plans, that the drawings and plans comply with the requirements of this Code.

106.8 Licensed Professionals. When it is required that plans be prepared by a licensed professional, no plans shall be approved for permit unless such plans are signed and sealed by an architect licensed to practice architecture, as provided by the Illinois Architectural Act, or by a structural engineer licensed to practice professional engineering, as provided by the Illinois Structural Engineer Act, or by a registered engineer licensed to practice professional engineering as provided by the Illinois Professional Engineering Act; provided, however, that the person who signs and seals such plans shall be permitted to do so within the limitations of the particular act under which he is licensed to practice, and; provided further, that plans for installations which involve the design of or changes in the supporting structure or which materially affect the structural loadings must be signed and sealed by an architect or structural engineer duly licensed as aforesaid.

Section 109: Delete Section 109.3.5 "Lath and gypsum board inspections" (including the Exception paragraph), and amend Section 109.5 "Inspection Requests" to read as follows:
109.5 Inspection Requests. It shall be the duty of the holder of the building permit or their duly authorized agent to notify the building official when work is ready for inspection. It shall be the duty of the permit holder to provide access to and means for inspections of such work that are required by this code. At least twenty-four hours' notice shall be given to the Building and Zoning Division by the permit holder for each required inspection.

Section 110: Add Section 110.5, as follows:

110.5 Grading Survey and As-Built Elevation Certification.

1. Requirement: This section applies to single- and multi-family dwelling units and commercial structures. A topographical survey of the construction site, as finally graded, prepared, and certified by a professional land surveyor or a registered professional engineer, shall be submitted to demonstrate compliance with approved plans, and that adequate provisions for drainage have been constructed. This topographical survey shall depict the location of the structure and the grade elevations designed for the site. The "as-built" elevation contours shall be at one (1) foot increments minimum and shall provide sufficient detail to adequately determine the proper final grading of a parcel as determined by the City Engineer or his designee. Additionally, a registered professional engineer shall certify the final grading of the site is in substantial compliance with the approved grading plans.

2. Weather Conditions: When weather conditions prohibit the final grading of the site in accordance with the approved plans or prevents a survey from certifying the same, the City Engineer or his/her designee may allow occupancy provided the following conditions are met.

a. The site/building may be occupied safely without endangering life or public welfare.

b. A $3,000 cash deposit or other suitable guarantee as determined by the City Engineer is posted for each lot where grading cannot be completed or verified. Occupancies allowed prior to completion of grading and verification of the same shall have a strict completion date as established by the City Engineer at the time of occupancy. The City shall return the guarantee for the full amount (no interest) after completion of the lot grading, submittal of a final survey and acceptance by the City inspector.

Section 113: Amend paragraph 113.4 "Violation Penalties" to read as follows:

113.4 Violation Penalties. Any person who violates a provision of this code or fails to comply with any of the requirements thereof or who erects, constructs, alters or repairs a building or structure in violation of an approved plan or directive of the building official, or of a permit or certificate issued under the provisions of this code, shall be subject to a fine of not less than fifty dollars nor more than seven hundred fifty dollars. Each day that a violation continues shall be deemed a separate violation. The imposition of a fine shall not preclude the Building Commissioner from instituting appropriate legal action to prevent unlawful construction or to restrain, correct or abate a violation, or to prevent illegal occupancy of a building, structure or premises or to stop an illegal act, conduct, business or use of a building or structure in or about any premises.

Section 115: Add Sections 115.6, 115.7, 115.8 and 115.9 as follows:

115.6 Vacating Structures. When, in the opinion of the building official, there is an actual and immediate danger of failure or collapse of a building or structure or any part thereof which would endanger life, or when any structure or part of a structure has fallen and life is endangered by the occupation of the building or structure, the building official shall require the occupants to vacate the same forthwith. He shall cause to be posted at each entrance to such building a notice reading as follows: "This structure is unsafe and its use or occupancy has been prohibited by the Building and Zoning Commissioner, and it shall be unlawful for any person to enter such building or structure except for the purpose of making the required repairs or demolishing the same."

115.7 Temporary Safeguards. When, in the opinion of the building official, there is actual and immediate danger of collapse or failure of a building or structure or any part thereof which would endanger life, he shall cause the necessary work to be done to render such building or structure or part thereof temporarily safe, and shall employ the necessary labor and materials to perform the required work as expeditiously as possible.

115.8 Costs of Emergency Repairs. Costs incurred in the performance of emergency work shall be paid from the treasury of the jurisdiction on certificate of the duly authorized official and the legal authority of the jurisdiction shall institute appropriate action against the owner of the premises where the unsafe building or structure was located for the recovery of such costs.

115.9 Closing Streets. When necessary for the public safety, the duly authorized official may temporarily close sidewalks, streets, buildings and structures and places adjacent to such unsafe structures, and prohibit the same from being used.

Add a Section 116 "Posting Structures" and sections 116.1 through 116.4, as follows:
Section 116 Posting Structures
116.1 Posted Use and Occupancy. Every building and structure and part thereof designed for business, factory and industrial, high hazard, mercantile, or storage use (use groups B, F, H, M and S) as defined in Article 2, shall be posted on all floors by the owner with a suitably designed placard in a form designated by the Building and Zoning Commissioner, which shall be securely fastened to the structure in a readily visible place, stating the use group, the fire grading, the live load and the occupancy load.

116.2 Posted Occupancy Load. Every room constituting a place of assembly shall have the occupancy load of the room posted in a conspicuous place, near the main exit from the room. Approved signs shall be maintained in a legible manner by the owner or his authorized agent. Signs shall be durable and shall indicate the number of occupants permitted for each room use.

116.3 Replacement of Posted Signs. All posting signs shall be furnished by the owner and shall be of permanent design; they shall not be removed or defaced, and if lost, removed or defaced, shall be immediately replaced.

116.4 Periodic Inspection. The Building and Zoning Commissioner and/or other duly authorized official may periodically inspect or cause to be inspected all existing buildings and structures, except one-family and two-family dwellings, for compliance with the law in respect to posting; or may accept the report of such inspection from an authorized licensed professional engineer or architect; and such inspection and report shall specify any violation of the requirements of this Code in respect to the posting of floor load, fire grading, occupancy load and use group of the building."

Add a Section 117 "Demolition and Moving of Structures", as follows:
Section 117 Demolition and Moving of Structures
117.1 Service Connections. Before a permit is issued to demolish or move a structure, the owner or agent shall notify all utilities having service connections within the structure such as water, electric, gas, sewer and other utilities. A permit to demolish or move a structure shall not be issued until verification is made by the utilities, confirming that their respective service connections and appurtenant equipment, such as meters, regulators, etc., have been removed or sealed and plugged in a safe manner.

117.2 Site Safety. Whenever a structure is demolished or moved, the premises shall be maintained free from all unsafe or hazardous conditions by the erection of the necessary fencing to keep the public from entering the site. Unsafe materials shall be removed and established grades shall be restored as soon as practicable.

117.3 Demolition Plan. Prior to issuance of a demolition permit, a demolition plan shall be submitted including a plot plan showing the buildings or structures to be demolished and the buildings or structures on the same lot that are to remain. The demolition plan shall include a description of methods used for demolition and removal and of the methods to be used to minimize potential impacts including noise, debris and dust.

Add a Section 118 "Contractor Responsibility," as follows:
118.1 Contractor Responsibility. The actual construction of the work shall be the responsibility of the general contractor as identified on the approved building permit. The general contractor shall execute all work in **accordance** with the approved construction documents, and shall execute and control all methods of construction in a safe and satisfactory manner in accordance with all applicable local, state, and federal statutes and regulations.
(Ord. 2004-M-65 § 1.)

15.101.020 Applicability.
Removed in its entirety. (Ord. 2004-M-65 § 1; Ord. 1996-M-53 § 33 ; Ord. 1983-M-25 § 1 (part).)

15.101.030 Ordinary repairs.
Removed in its entirety. (Ord. 2004-M-65 § 1; Ord. 1983-M-25 § 1 (part).)

15.101.040 Installation of service equipment.
Removed in its entirety. (Ord. 2004-M-65 § 1; Ord. 1983-M-25 § 1 (part).)

15.101.050 Maintenance.
Removed in its entirety. (Ord. 2004-M-65 § 1; Ord. 1983-M-25 § 1 (part).)

15.101.060 Change in existing use.
Removed in its entirety. (Ord. 2004-M-65 § 1.)

15.101.070 Existing structures.
Removed in its entirety. (Ord. 2004-M-65 § 1; Ord. 1983-M-25 § 1 (part).)

15.101.080 Department of building inspection.
Removed in its entirety. (Ord. 2004-M-65 § 1; Ord. 1983-M-25 § 1 (part).)

15.101.090 Duties and powers of building commissioner.
Removed in its entirety. (Ord. 2004-M-65 § 1; Ord. 1983-M-25 § 1 (part).)

15.101.100 Approval.
Removed in its entirety. (Ord. 2004-M-65 § 1; Ord. 1983-M-25 § (part).)

15.101.110 Inspection.
Removed in its entirety. (Ord. 2004-M-65 § 1; Ord. 1983-M-25 § 1 (part).)

15.101.120 Right of entry

Removed in its entirety. (Ord. 2004-M-65 § 1; Ord. 1983-M-25 § 1 (part).)

15.101.130 Application for permit.
Removed in its entirety. (Ord. 2004-M-65 § 1; Ord. 1983-M-25 § 1 (part).)

15.101.140 Permits.
Removed in its entirety. (Ord. 2004-M-65 § 1; Ord. 1983-M-25 § 1 (part).)

15.101.150 Permit and Inspection Fees.
A. Payment of Fees. All base fees shall be paid at the time of submittal of the permit application and plans. Other fees calculated from square footage, estimated cost, and other unit measures shall be paid prior to issuance of a permit. Additional fees and reimbursements that are incurred after issuance of a permit shall be paid prior to issuance of a certificate of occupancy. All permit fees are non-refundable.

B. Building Permit Fees. Permit fees for construction, alteration, demolition, installation, and other work as listed herein are established as follows:

1. New residential buildings:
   a. Single family detached dwellings.
      i. Base fee: one hundred twenty five ($125.00) dollars. (Due at the time of submittal)
      ii. $0.27 cents per square foot of each level of building – including basement, garage, crawl space.
   b. Single family attached dwellings – townhouse/duplex.
      i. Base fee: one hundred twenty five ($125.00) dollars. (Due at the time of submittal)
      ii. $0.27 cents per square foot of each level of building – including basement, garage, and crawl space.
   c. Multi-family buildings-apartments/condominiums/mix use.
      i. Base fee: three hundred seventy ($370.00) dollars for the entire building. (Due at the time of submittal)
      ii. $0.42 cents per square foot for the first 10,000 square feet.
      iii. From 10,001 square foot and above $0.16 cents per square foot.
2. New industrial, business, commercial or other non-residential buildings:
   a. Base fee: three hundred seventy ($370.00) dollars for the entire building. (Due at the time of submittal)
   b. $0.42 cents per square foot for the first 10,000 square feet.
   c. From 10,001 square foot and above $0.15 cents per square foot.
3. Additions to existing buildings:
   a. Residential:
      i. Base fee: one hundred twenty five ($125.00) dollars. (Due at the time of submittal)
      ii. $0.27 cents per square foot of each level of building – including basement, garage, and crawl space.
   b. Industrial, business, commercial, or other non-residential buildings:
      i. Base fee of three hundred seventy ($370.00) dollars. (Due at the time of submittal)
      ii. $0.42 cents per square foot for the first 10,000 square feet.
      iii. From 10,001 square feet and above $0.16 cents per square foot.
4. Alterations to existing buildings:
   a. Residential:

i. Base fee: one hundred twenty five ($125.00) dollars.
(Due at the time of submittal)
ii. For estimated cost of up to four thousand dollars, no additional fee.
iii. For estimated cost from four thousand dollars to twenty-four thousand dollars, six dollars and sixty cents ($6.60) for each one thousand dollars or fraction thereof.
iv. For estimated cost in excess of twenty-four thousand dollars, three dollars ($3.00) for each thousand dollars or fraction thereof.

b. Industrial, business, commercial, or other non-residential buildings.
i. Base fee: three hundred seventy ($370.00) dollars.
(Due at the time of submittal)
ii. For estimated cost up to four thousand dollars, no additional fees.
iii. From four thousand and one dollars to twenty-four thousand dollars of estimated cost, six dollars and sixty cents ($6.60) for each one thousand dollars or fraction thereof.
iv. For estimated cost in excess of twenty-four thousand dollars, three dollars ($3.00) for each one thousand dollars or fraction thereof.
v. Fire Prevention Inspections – Eighty ($80.00) dollars per inspection, if required.

5. Miscellaneous permits:

a. New and replacement central air conditional units, furnaces, roof top units (HVAC), water heaters, water softeners, and similar equipment.
Base fee: thirty ($30.00) dollars.
(Due at the time of submittal)

b. Decks, gazebos, or pergola (Outdoors).
Base fee: seventy ($70.00) dollars.
(Due at the time of submittal)

c. Demolition or wrecking of any building or other structure
i. Residential.
Base fee: three hundred ($300.00) dollars.
(Due at the time of submittal)
ii. Industrial, business, commercial, or other non-residential buildings.
Base fee: four hundred and twenty-five dollars ($425.00) dollars.
(Due at the time of submittal)
iii. All partial demolitions that do not include disconnect of any utility service.
Base fee: fifty ($50.00) dollars.
(Due at the time of submittal)

d. Elevators or lifts.
i. Base fee: ninety ($90.00) dollars.
(Due at the time of submittal)
ii. Reimbursement of direct costs of review fees from Elevator Inspection Service.

e. Fences.
Base fee: fifty-five ($55.00) dollars.
Due at the time of submittal)
Partial Fence Installation – Repair and requires no recording fee – twenty-five ($25.00)

f. Garages.
i. Detached.
Base fee: ninety ($90.00) dollars.
(Due at the time of the submittal)
ii. Attached.
Base fee: one hundred fifty-five ($155.00) dollars.

(Due at the time of the submittal)

g. Kiosk, commercial.
   Base fee: fifty-five ($55.00) dollars.
   (Due at the time of submittal)

h. Landscape review.
   Reimburse City for direct cost for review of landscape plans and tree preservation plans by a landscape architect.

i. Lawn sprinklers.
   Base fee: one hundred five ($105.00) dollars.
   (Due at the time of submittal)

j. Low voltage installations (Lighting, fountains, light poles, etc.)
   Base fee: ninety ($90.00) dollars.
   (Due at the time of submittal)

k. Outdoor sales – temporary tents, trailers, (where permitted).
   Base fee: sixty ($60.00) dollars.
   (Due at the time of submittal)

l. Parking lots.
   Base fee: ninety ($90.00) dollars.
   (Due at the time of submittal)

m. Re-roofs.
   i. Residential.
      Base fee: thirty-five ($35.00) dollars.
      (Due at the time of submittal)
   ii. Commercial, industrial, or other non-residential buildings.
      Base fee: sixty ($60.00) dollars.
      (Due at the time of submittal)

n. Right-of-way and/or private driveways.
   Base fee: fifty-five ($55.00) dollars
   (Due at the time of submittal)

   Street Cut
   Base fee: seventy ($70.00) dollars
   (Due at the time of submittal)

o. Sewer or water repair or replacement; sewer clean outs (utility repair)
   i. Base fee: fifty ($50.00) dollars.
      (Due at the time of submittal)
   ii. Inspections conducted at off hours will be invoiced at double the inspectors prevailing hourly wage.

p. Sheds (24 square feet or more).
   Base fee: fifty ($50.00) dollars.
   (Due at the time of submittal)

q. Siding, soffit, and fascia (Replace, repair, or new)
   Base fee: fifty ($50.00) dollars.
   (Due at the time of submittal)

r. Signs (canopy, marquees, temporary signs and banners)
   i. Permanent freestanding signs
      a) Base fee: ninety($90.00) dollars.
         (Due at the time of submittal)
      b) Plus $2.15 per square foot of sign area.
   ii. Permanent signs other than freestanding signs
      a) Base fee: ninety ($90.00) dollars.

(Due at the time of submittal)

b) For each additional sign after the one permanent sign, five ($5.00) dollars for each additional sign.

iii. Temporary.

Base fee: thirty-five ($35.00) dollars.
(Due at the time of submittal)

s. Swimming pool.

i. In-ground.
Base fee: one hundred eighty-five ($185.00) dollars.
(Due at the time of submittal)

ii. Above ground designed for water depth over 24-inches.
Base fee fifty-five ($55.00) dollars.
(Due at the time of submittal)

t. Window(s) and door(s) replacement
Base fee: forty-five ($45.00) dollars.
(Due at the time of submittal)

u. All permit types not listed will be charged thirty-five ($35.00) dollars per inspection.

(Ord. 2009-M-36 § 1.)

6. Additional Fire Department Fees:
   a. Review of fire alarm system plans: Base fee: eighty ($80.00) dollars.
   b. Review of sprinkler system plans: Base fee: eighty ($80.00) dollars.
   c. Review of standpipe systems: Base fee: eighty ($80.00) dollars.
   d. Review of other fire extinguisher systems (kitchen suppression): Base fee: eighty ($80.00) dollars.
   e. Review of above-ground and underground storage tank plans: Base fee: eighty ($80.00) dollars.
   f. Special inspections: kitchen hood and duct; kitchen suppression; sprinkler dry system; FM200 system; room integrity. Eighty ($80.00) per inspection.
   g. Smoke evacuation test. Eighty ($80.00) dollars per man hour plus equipment and materials.
   h. Fire flow test. Base fee: one hundred sixty ($160.00) dollars.
   i. Any other special inspection. Eighty ($80.00) dollars per man hour plus material if required.
7. Additional fees:
   a. Initial Architectural Plan Review and Examination fees: No additional charge (included in base fee)
   b. Outside Plan Review – Applicant shall pay direct cost for plan review by a consultant hired by the City, but will be credited one-third (1/3) of plan review cost on building permit fee.
   c. Review of revised plans and specifications: one-half of base fees.
   d. Revisions to approved construction plans submitted after issuance of a building permit, when initiated by the permit holder, owner, contractor or architect: One-half of base fee.
   e. Re-inspection fees (due prior to the issuance of a certificate of occupancy):
      i. Sixty-five ($65.00) dollars per Building Division re-inspection for all types of inspections during construction (excluding finals).
      ii. Eighty ($80.00) dollars per Fire Department re-inspection for all types of inspections during construction (excluding finals).
      iii. Eighty-five ($85.00) dollars per re-inspection for all residential final inspections.
      iv. One hundred seventy ($170.00) dollars per re-inspection for all industrial, commercial, business, and other non-residential final inspections.
   f. Temporary certificates of occupancy (due prior to issuance of the temporary certificate of occupancy):
      i. Residential: Eighty-five ($85.00) dollars.

ii. Industrial, commercial, business, or other non-residential building: One hundred seventy ($170.00) dollars.

g. Reimbursement for Fire Protection services: The applicant shall reimburse the City for the actual cost of services billed to the City by a fire protection company relation to review of plans and specifications, meetings, inspections, and associated tasks relative to any application for permit.

h. Waiving of building permit fees may be granted by the City Council for the construction of one and two family residential dwelling units, additions and alterations by a non-profit organization for an owner occupancy and/or family member with special needs.

i. Any unit of Federal, State, or local government agency shall be exempt from filing fees and permit fees. The applicant shall be responsible for outside consultant services and miscellaneous fees, (i.e. re-inspection fees, temporary occupancy fees etc.…)

(Ord. 2008-M-94 § 1; Ord. 2007-M-29 § 1; Ord. 2004-M-73 § 1; Ord. 2004-M-65 § 1; Ord. 2002-M-62 § 1; Ord. 1998-M-72 § 1; Ord. 1997-M-141 § 1; Ord. 1983-M-25 § 1 (part).)

15.101.160 Demolition of structures.
Removed in its entirety. (Ord. 2004-M-65 § 1; Ord. 1983-M-25 § 1 (part).)

15.101.170 Moved structures.
Removed in its entirety. (Ord. 2004-M-65 § 1; Ord. 1983-M-25 § 1 (part).)

15.101.190 Certificate of use and occupancy.
Removed in its entirety. (Ord. 2004-M-65 § 1; Ord. 2002-M-3 § 1; Ord. 1996-M-56 § 1; Ord. 1983-M-25 § 1 (part).)

15.101.200 Posting structures.
Removed in its entirety. (Ord. 2004-M-65 § 1; Ord. 1983-M-25 § 1 (part).)

15.101.210 Violations.
Removed in its entirety. (Ord. 2004-M-65 § 1; Ord. 1983-M-25 § 1 (part).)

15.101.220 Stop-work order.
Removed in its entirety. (Ord. 2004-M-65 § 1; Ord. 1983-M-25 § 1 (part).)

15.101.230 Unsafe structures.
Removed in its entirety. (Ord. 2004-M-65 § 1; Ord. 1983-M-25 § 1 (part).)

15.101.240 Emergency measures.
Removed in its entirety. (Ord. 2004-M-65 § 1; Ord. 1983-M-25 § 1(part).)

15.101.250 Board of survey.
Removed in its entirety. (Ord. 2004-M-65 § 1; Ord. 1983-M-25 (part).)

15.101.260 Board of Appeals.
Removed in its entirety. (Ord. 2004-M-65 § 1; Ord. 1983-M-25 § 1 (part).)

15.101.270 Architectural, Engineering and Contractor Services.
Removed in its entirety. (Ord. 2004-M-65 § 1; Ord. 1983-M-25 § (part).)

15.101.280 Validity.
Removed in its entirety. (Ord. 2004-M-65 § 1; Ord. 1983-M-25 § 1 (part).)

TITLE 15 FOOTNOTES

1. For statutory provisions authorizing cities to regulate the construction of buildings, see 65 ILCS 5/11-30-4. (Ord. 1996-M-53 § 32.)

2. For statutory provisions on municipal regulation of dangerous buildings, see 65 ILCS 5/11-31-1. (Ord. 1996-M-53 § 32.)

3. For statutory provisions on municipal fire limits, see 65 ILCS 5/11-8-3. (Ord. 1996-M-53 § 32.)

4. For statutory provisions on fire safety regulations, see 65 ILCS 5/11-8-1 et seq. Prior ordinance history: Ords. 1967-17, 1967-23, 1969-M-10. (Ord. 1996-M-53 § 32.)

5. For statutory provisions of the state plumbing code, see 225 ILCS 320. (Ord. 1996-M-53 § 32.)

6. For statutory provisions on fair housing ordinances, see 65 ILCS 5/11-11.1-1. (Ord. 1996-M-53 § 32.)

7. For statutory provisions on general regulatory powers of cities over buildings, see 65 ILCS 5/11-30-4. (Ord. 1996-M-53 § 32.)