ST. CHARLES SINCE 1834	**AGENDA ITEM EXECUTIVE SUMMARY**	
	Title:	Recommendation to Execute Budget Revision, Waive Bids and Accept Quotation for LED Bridge Fixtures
	Presenter:	Glynn Amburgey

Please check appropriate box:

	Government Operations	X	Government Services 06.27.11
	Planning & Development		City Council
	Public Hearing		

Estimated Cost:	$96,533.69	Budgeted:	YES	X	NO	

If NO, please explain how item will be funded:

Executive Summary:

Last year we changed the light fixtures on the 2nd Avenue bridge to LED. Our plan was to convert all of our bridges to this fixture over the next 4 budget years. However, IMEA grant funds are available, and have been authorized, to complete all bridges this year. Our four year budget amount is $115,000. Using IMEA grant funds will reduce our total cost to $26,179 for a savings of $88,821. This will convert the 3rd Ave, Illinois St and Prairie St bridges to the same LED fixtures as the ones on 2nd Ave. The Beacon fixtures are sole sourced from Lighting Solutions.

Attachments: *(please list)*

Budget Revision, Bid waiver, Quotation from Lighting Solutions, Beacon Light Fixture drawing

Recommendation / Suggested Action *(briefly explain)*:

Approve budget revision, waive the bid process, authorize the purchase of 31 LED bridge light fixtures from Lighting Solutions for $96,533.69.

For office use only:	*Agenda Item Number: 3.f*

BUDGET REVISION REQUEST FORM

Department: Public Works - Electric Date Requested: June 27, 2011

Purpose of Request/Comments (Attach additional pages if necessary)

The purpose of this request is to move the planned bridge light conversions from a four year project into a single budget year. This will allow us to use IMEA grant funds to offset a large part of the project cost. The IMEA grant will provide $78,538 of the $96, 533.69 material cost.

Equal Dollar Transfer

Amount _____

Account Numbers

From: _____ To: _____

Ref #: _____ Proj # _____ Ref #: _____ Proj # _____

Addition (or Decrease) to Department Budget

Account # 200-70-89-03252 Amount $81,533.69

Ref #: 71174 Proj # _____

Originator: Glynn Amburgey June 27, 2011
Date

Depatment Head: _____ _____
Date

Dir. Of Finance/Administration: _____ _____
Date

For Finance Use Only
Revision entered and updated _____
Date
By: _____

REQUEST FOR WAIVING BID PROCEDURE

We request the City Council to waive the bid procedure and accept the quotation (requiring two-thirds City Council vote) submitted by:

Lighting Solutions of Illinoins, Inc.
703 Childs Street
Wheaton, IL 60187

For the services: 31 LED Bridge Light Fixtures, Quote #11-1079 for $96,533.69

Reason for the request to waive the bid procedure: Sole source special LED fixture from Beacon Products.

Other Quotations Received: None

Date: 6/27/2011

Requested by: _____Glynn Amburgey_____

Department Director: _____

Purchasing Manager: _____

Committee Chairman: _____

THIS REQUEST FORM MUST BE SIGNED BY ALL PARTIES PRIOR TO REQUESTING COMMITTEE APPROVAL FOR WAIVING OF THE BID PROCEDURE. REQUESTS FORWARDED DIRECTLY TO THE CITY COUNCIL (AND BYPASSING COMMITTEE) MUST BE SIGNED BY ALL PARTIES PRIOR TO REQUESTING CITY COUNCIL APPROVAL. SUCH REQUESTS ARE TO BE OF AN EMERGENCY NATURE WHERE TIME IS OF THE ESSENCE.

Quote # 11-1079 CITY OF ST CHARLES/BRIDGES

Lighting Solutions of Illinois, Inc.

A Will Group Company

703 Childs Street
Wheaton, IL 60187

Phone: 630.462.0230
Fax: 630.462.9077

To: ROSS WEIGERT
CITY OF ST CHARLES
TWO EAST MAIN STREET
ST CHARLES, IL 60174
PH: 630-377-4449 Fax 630-377-4432

Job/Project Name: CITY OF ST CHARLES/BRIDGES

ST CHARLES, IL
Bid Date: 5/11/2011

Qty	Type	Mfg	Description	Sell	Extd.Sell
62		BEAC	5616/ACT/F23/LED48-120-277V/DR3/LSP/RAL6009	1035.55	64204.10
31		BEAC	AA-70MOD/B/RAL6009	475.00	14725.00
31		BEAC	SHO4/S/4.67/4M/OT/RAL6009	217.45	6740.95
31		BEAC	GETT/4/RAL6009	350.44	10863.64
			FREIGHT ALLOWED		
			LAMPS NOT INCLUDED		
			QTY DISCOUNT		
			TOTAL:		96533.69

Prices firm for entry by:

Shipment by:

Valmont Freight Allowance $1500.
Valmont minmum order value is $500. Orders below $500, will incur a $50 processing fee.
Gels Freight Allowance $3000.
Gels minimum order value is $100 (excluding replacement parts, 35-#'s). Orders below $100, will incur a $100 processing fee.
Dco Freight Allowance is $3000.
Dco minimum order value is $50
Bronzelite Fright Allowance is $2500. A $25.00 service charge will be added to each order under $300.00
Gardco/EMCO Freight Allowance is $3000. Less than 5 poles will have a $125 surcharge.
Finelite Full Freight will be allowed on orders over 200 feet. Orders under 200',customer will pay freight.
Lumec Freight Allowance is $5000.
Lumec minimum order value is $300, with exception of orders for replacement parts which is $100.
Morlite No Freight Allowance
Thomas Decorative Freight Allowance $1500
Thomas Decorative minimum order value is $200. orders below $200, will incur a $20 processing fee.
Shakespeare Freight Allowance $3000
Beacon Freight Allowance $5000.
HCI Freight Allownace $5000.
Sentry No Freight Allowance.
Add Freight for preshipment of anchor bolts.
NO labor charge backs will be paid without prior authorization from the factory.
Manufacturers standard freight tersm apply. Freight claims are the responsibility of the customer
Lamps not included unless noted
Subject to manufacturer's published terms and conditions of sale.
Quotation based upon all types and quantities. Any changes will void quotation.

Printed: 05/17/11 08:07:54 Per: YOLANA GIACOPELLI

BEACON PRODUCTS

GETTYSBURG BASE COVER, 4" SMOOTH POLE AA-70/C ARM AND 5A16/ACT/F23 LUMINAIRES

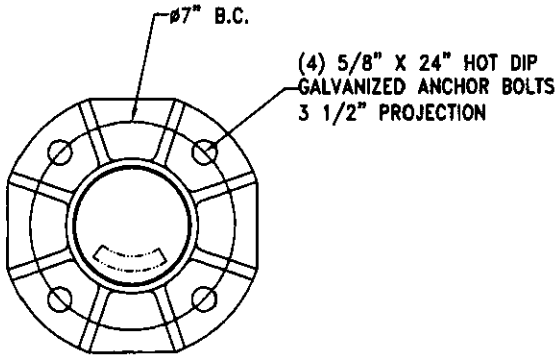

BASE FOOTPRINT

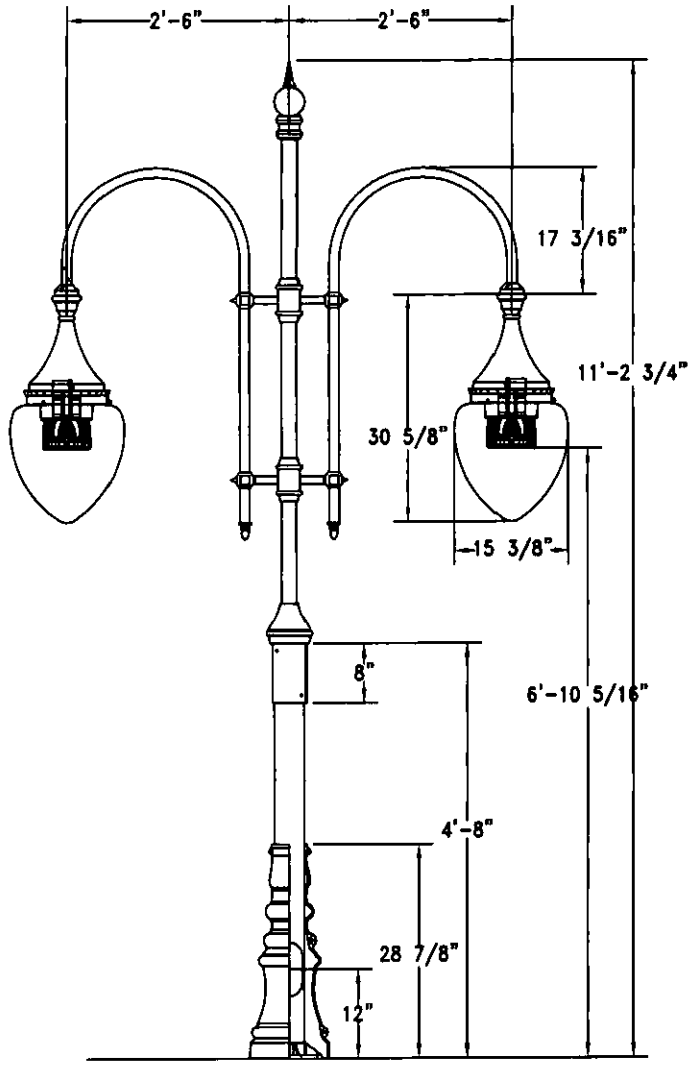

CITY OF ST. CHARLES TYPE: DOUBLE ASSY QTY:

CATALOG NO: 5A16/ACT/F23/LED48-120-277/DIR3/LSP/TBD
AA-70/C/TBD SH04/4.67/4M/OT/TBD GETBC/4/TBD

ALL CAST ALUMINUM PARTS ARE COPPER FREE ALLOY A356
ALL EXTRUDED ALUMINUM PARTS ARE ALLOY 6061-T6

LENS: ACRYLIC CLEAR TEXTURED
OPTICS: TYPE III LED LENSES

LIGHT SOURCE: 48 WATT LED ENGINE AND DRIVERS COMBINATION

VOLTAGE: 120-277 VOLTS Hz: 60

ELECTRICAL OPTIONS: LSP (LIGHTNING SURGE PROTECTOR)

FIXTURE SHALL BE NRTL LISTED FOR WET LOCATION
FASTENERS: ALL FASTENERS ARE STAINLESS STEEL
(TAMPER RESISTANT OPTIONAL, SPANNER HD (SNAKE EYE) SPECIAL TOOL REQUIRED, NOT PROVIDED)

FINISH: BEACOTE V
POLYESTHER POWDER COAT ELECTROSTATICALLY APPLIED AND THERMOCURED.
COLOR TBD

DRAWING NUMBER: SUBMIT\SUB-0007438 C.H. 03-15-10

APPROVED BY: _____ C.H. _____ M.A.I.

SALES ORDER NUMBER: _____
COMPANY NAME: _____
SPECIFIER NAME: _____
SIGNATURE: _____ DATE: _____

THIS DRAWING IS THE PROPERTY OF BEACON PRODUCTS LLC. COPYRIGHT IS RESERVED AND THIS DRAWING IS ISSUED ON THE CONDITION THAT IT IS NOT COPIED, REPRODUCED, RETAINED OR DISCLOSED TO ANY UNAUTHORIZED PERSON OR ENTITY, EITHER WHOLLY OR IN PART WITHOUT OUR CONSENT

2041 58th AVENUE CIRCLE EAST, BRADENTON, FL 34203 · PHONE: (941) - 755 - 6694 · FAX: (941) - 751 - 5535